ACCESSORIES SERIES

TMA24

24 VAC SAFETY TIMER

Timer adjustable from 5 to 55 s that disables the load if the input stays closed longer than the set time.

24 Vac | Made in Italy

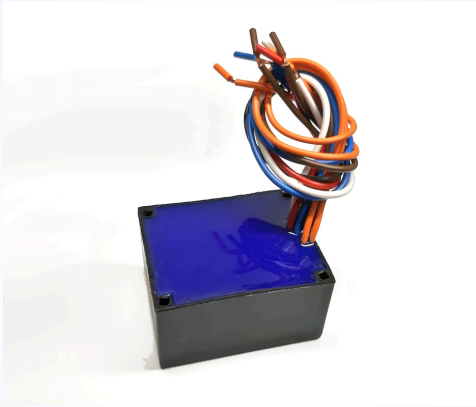

POWER SUPPLY	OUTPUT	TIME	DIMENSIONS
24 Vac	**6** A NC relay	**5–55** s	**50×40×25** mm

TECHNICAL DATA

Power supply	24 Vac, 50/60 Hz
Output	6 A relay (230 Vac), NC clean contacts
Adjustment	5–55 s with external 100 kΩ potentiometer/trimmer (on request)
Fixed version	Time set internally, on request
Connections	FS17 coloured 0.5 mm² cables, approx. 18 cm
Dimensions (L×W×H)	50 × 40 × 25 mm
Weight	80 g
Protection	Electronics encapsulated in epoxy resin

MAIN FUNCTIONS

- Counting starts when the push-button input closes
- When the time is reached the relay opens and disables the load
- Input opened before the time: count reset
- Reset by removing power for a few seconds

DESCRIPTION

TMA24 is a simple and versatile timer, adjustable between 5 and 55 seconds with an external 100 kΩ potentiometer or trimmer (not supplied as standard).

When the push-button input closes the board starts counting; when the set time is reached the relay opens its contacts and permanently disables the connected load until power is removed.

PRESSURE WASHER ELECTRONICS

DESIGNED AND MADE IN ITALY

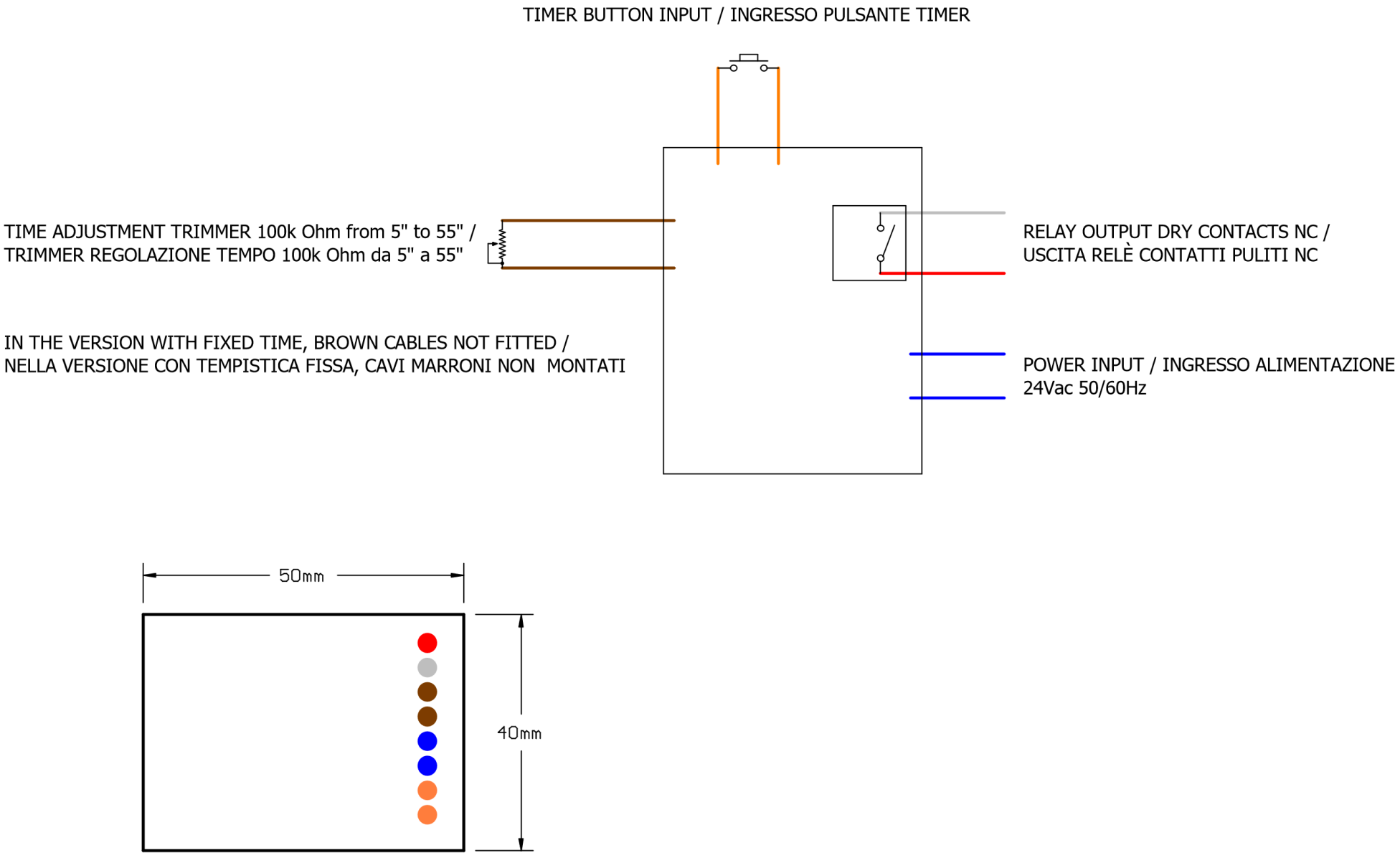

Bilingual EN / IT legends as per manufacturer's diagram · Drawings not to scale

G.Milani s.a.s. · Via Cavaglietto 25, 28010 Cavaglio d'Agogna (NO) · +39 0322 80 68 20 · info@gmilani.it · gmilani.cloud