PREMIUM SERIES

TLR FULL

COMPLETE CONTROL UNIT FOR HOT-WATER PRESSURE WASHERS

Full management of hot-water machines: pump, burner, fan, spark and anti-scale handled by a single microprocessor, configurable from a PC.

Hot water · Cold water · 90–520 Vac · Made in Italy



POWER SUPPLY	PUMP 400 V	PUMP 230 V	DIMENSIONS
90–520 Vac	**7.5** kW · 10 HP	**5.5** kW · 7.5 HP	**130×100×50** mm

TECHNICAL DATA

Power supply	90–520 Vac, 50/60 Hz, automatic voltage detection
Pump motor	400 V up to 7.5 kW / 10 HP · 230 V up to 5.5 kW / 7.5 HP
Pump output	3 × 40 A relays
Smoke fan	1 × 8+8 A relay (dual-phase interruption)
Spark	1 × 10 A relay
Diesel solenoid valve	1 × 10 A relay, NO clean contacts
Anti-scale	1 × 10 A relay, NO clean contacts
Indicators	4 independent 12 Vdc LED outputs (max 100 mA)
Inputs	Pressure switches, motor thermal, diesel and detergent floats, photocell, thermostat, reset, low-voltage general and hot-section ON/OFF
Connections	6.3 mm Faston (power) · Phoenix plug-in terminals (control)
Dimensions (L×W×H)	130 × 100 × 50 mm
Weight	700 g
Protection	Electronics encapsulated in epoxy resin

MAIN FUNCTIONS

- Full PC configuration with TesterTLR software
- Unique serial number for traceability
- Smart spark: disabled once the flame is detected
- Hour-meter for hot/cold operation, thermal events and maintenance
- Motor thermal protection with automatic restart
- Tamper-proof photocell monitoring
- Anti-scale at intervals (counting only while the pump runs)
- Partial hour-meter reset button (can be enabled)

DESCRIPTION

TLR FULL is the electronic control unit for the complete management of hot-water pressure washers. All functions are handled by a microprocessor and can be configured with the **TesterTLR** software for Windows PCs.

The universal 90–520 Vac supply is detected automatically, with no jumpers or adjustments. The manufacturer decides whether the machine keeps running or stops once the maintenance threshold is exceeded.

PRESSURE WASHER ELECTRONICS

DESIGNED AND MADE IN ITALY

CONFIGURABLE WITH TESTERTLR

- TotalStop delay at start-up and on trigger release
- Maximum continuous pump runtime
- Stand-by time
- Micro-leaks: number of events, minimum duration and time window
- Water, flame and diesel loss
- Smoke fan shutdown delay
- Maintenance warning and lockout for missed maintenance
- Inversion or exclusion of single inputs

Reset after an alarm: unless otherwise stated, remove power from the machine for a few seconds. Lockouts for missed maintenance can only be reset via software (service network).

LED 1 · MAINS

STATE	MEANING
OFF	No mains voltage
ON	Mains present
Blink 0.5 s / 0.5 s	Thermal protection tripped
Blink 2 s / 0.5 s	Temperature back to normal

LED 2 · WATER

STATE	MEANING
OFF	Normal operation
ON	Water shortage
Blink 0.5 s / 0.5 s	False starts
2 blinks	Maximum pump runtime
3 blinks	Maximum stand-by time
5 blinks	Detergent shortage

LED 3 · DIESEL

STATE	MEANING
OFF	Normal operation
ON	Diesel shortage
Blink 0.5 s / 0.5 s	Flame loss
6 blinks	Flame sensor error

LED 4 · MAINTENANCE

STATE	MEANING
OFF	Normal operation
ON	Maintenance required

All 4 LEDs blinking (0.5 s / 0.5 s): machine lockout due to missed maintenance.

P1 - Pressure switch generally mounted on the pump
Pressostato generalmente montato su pompa
P2 - Pressure switch generally mounted on the valve
Pressostato generalmente montato su valvola
T - Thermal control input for the pump motor
Ingresso controllo termica motore pompa
G1 - Diesel float switch input
Ingresso galleggiante gasolio
INT.GEN. - ON/OFF General low voltage switch with indicator
ON/OFF Interruttore in bassa tenesione generale con spia
INT.CALDO - ON/OFF Hot section switch with indicator
ON/OFF Interruttore selezione caldo con spia
RESET - Input for maintenance hour counter reset button
Ingresso per pulsante reset contaore manutenzione
FTC - Photocell sensor input
Ingresso sensore fotocellula
TERM. - Thermostat input
Ingresso termostato
G2 - Detergent float switch input
Ingresso galleggiante detergente
SP1 - 12Vdc output for LED indicator light (Network presence)
Uscita 12Vdc Spia led segnalazione (Presenza rete)
SP2 - 12Vdc output for LED indicator light (Water)
Uscita 12Vdc Spia led segnalazione (Acqua)
SP3 - 12Vdc output for LED indicator light (Diesel)
Uscita 12Vdc Spia led segnalazione (Gasolio)
SP4 - 12Vdc output for LED indicator light (Maintenance)
Uscita 12Vdc Spia led segnalazione (Manutenzione)
CONN - Programming interface connector with PC via TesterTlr software /
Connettore interfaccia programmazione tramite software TesterTlr

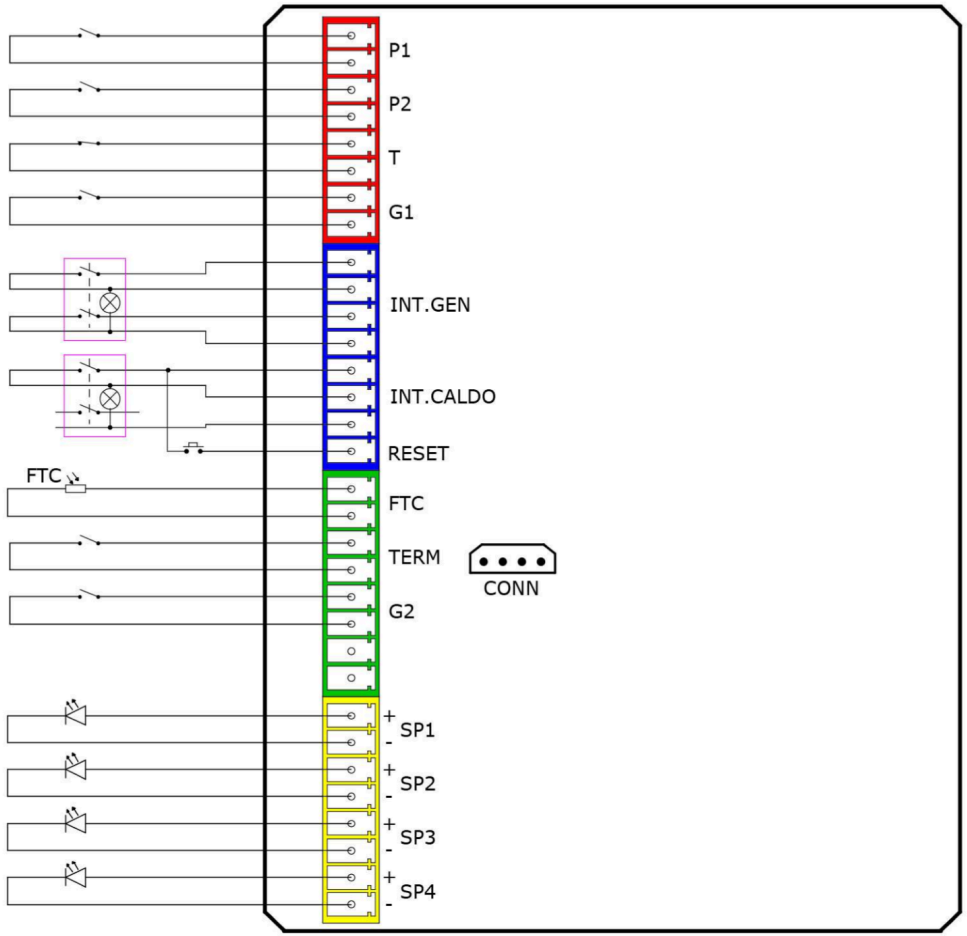

Bilingual EN / IT legends as per manufacturer's diagram · Drawings not to scale

G.Milani s.a.s. · Via Cavaglietto 25, 28010 Cavaglio d'Agogna (NO) · +39 0322 80 68 20 · info@gmilani.it · gmilani.cloud

Example of Connections:
Esempio di connessione:

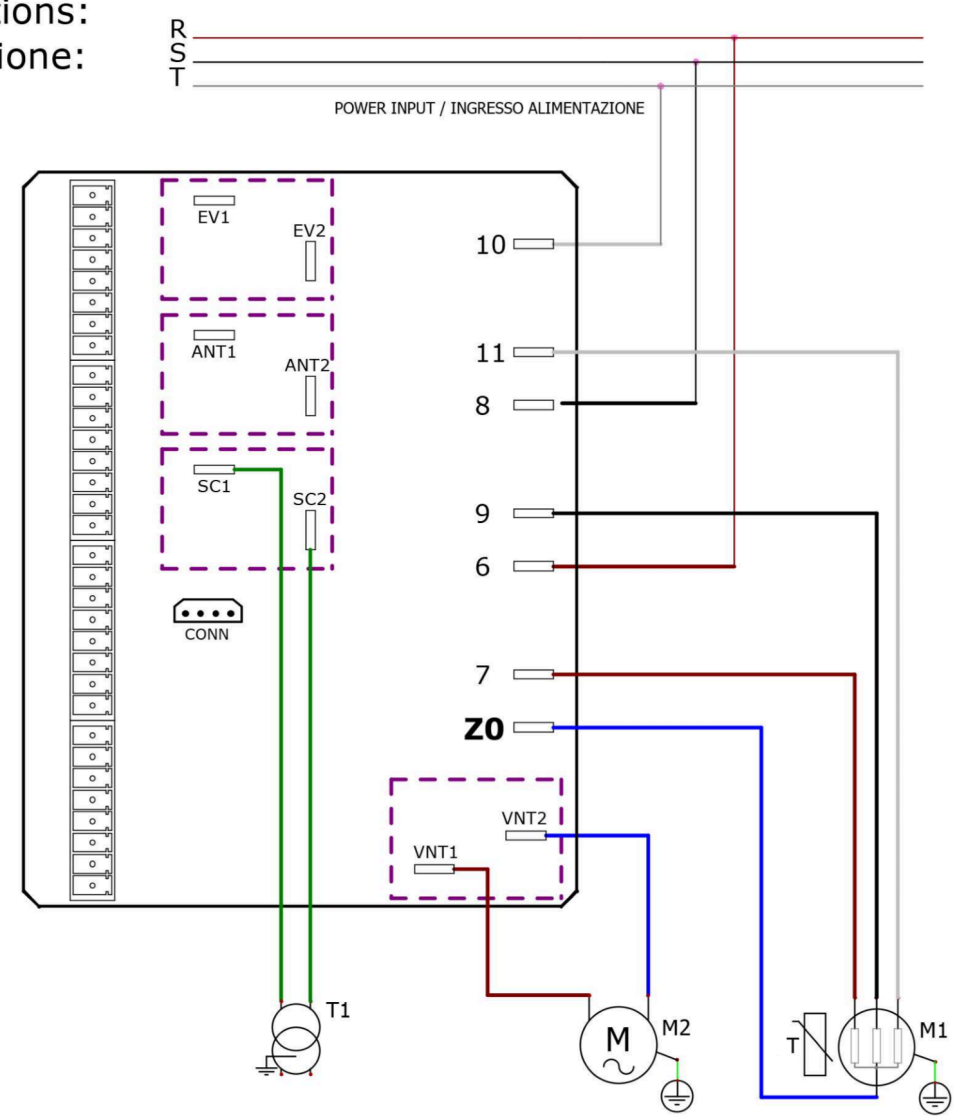

6,8,10 - Power Input
Ingresso alimentazione
7,9,11 - Water pump motor Output
Uscita motore pompa
Do not use 10,11 in single-phase
In monofase non usare 10,11
Z0 - Neutral input for 230Vac, or pump motor star center, connect to 8 in single-phase
Ingresso Neutro per 230Vac, oppure centro stella motore Pompa, unire con 8 in monofase
VNT1,VNT2 - 230Vac output for smoke fan motor
Uscita 230Vac motore ventola fumi
EV1,EV2 - Clean N/O contacts for diesel solenoid valve
Contatti N/O puliti Elettrovalvola gasolio
ANT1,ANT2 - Clean N/O contacts for descaling system
Contatti N/O puliti per anticalcare
SC1,SC2 - 230Vac Output Spark Igniter
Uscita 230Vac accenditore scintilla
CONN - Programming interface connector with PC via TesterTlr software /
Connettore interfaccia programmazione tramite software TesterTlr

M1 - Water pump outlet / Uscita pompa acqua
To reduce overvoltages and improve contact lifespan, it is recommended to install an RC snubber as close as possible to the motor/pump contacts, following the manufacturer's guidelines /
Per ridurre le sovratensioni e migliorare la durata dei contatti, si consiglia l'installazione di un gruppo RC il più vicino possibile ai contatti del motore/pompa, seguendo le indicazioni del produttore del motore.
T - motor safety thermal switch / Interruttore termica sicurezza motore
M2 - Smoke fan motor / Motore ventola fumi
T1 - Spark high voltage transformer / Trasformatore alta tensione scintilla

130 x 100 x 50 - Dimensions and clearance measurements for TLRFULL
Dimensioni ingombro TLRFULL

Bilingual EN / IT legends as per manufacturer's diagram · Drawings not to scale