ADVANCED SERIES

TLR-EC

CONTROL MODULE FOR COLD-WATER MACHINES WITH CONTACTOR

One module for the whole cold-water range: it drives an external contactor, monitors the motor thermal cut-out and logs every event.

❄ Cold water · 90–250 Vac · Made in Italy

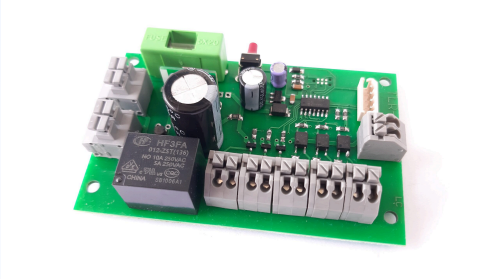

POWER SUPPLY	OUTPUT	PUMP	DIMENSIONS
90–250 Vac	**10** A NO relay	**Via** external contactor	**90×60×32** mm

TECHNICAL DATA

Board code	TLRF-EC
Power supply	90–250 Vac, 50/60 Hz
Output	10 A relay, NO clean contacts for contactor coil
Pump motor	Any power, through an external contactor
Inputs	Low-voltage pressure switches · motor thermal · external reset
Indicators	2 × 12 Vdc LED outputs
Input protection	Fuse against over-voltage
Connections	Quick-connect terminal blocks
Dimensions	90 × 60 × 32 mm
Weight	60 g
Construction	Tropicalized PCB

MAIN FUNCTIONS

- Microprocessor control, configurable with TesterTLR
- Serial number for traceability
- On-board reset button + external reset input
- Motor thermal input with event counter
- Total and partial hour-meter, maintenance management
- External contactor available on request

DESCRIPTION

TLR-EC is a microprocessor module for cold-water pressure washers. Working with an **external contactor**, the same control unit covers the whole range of cold-water machines regardless of power.

When the operating temperature is exceeded the thermal input stops the machine and signals it via LED; a different blink pattern shows that the temperature is back to normal. Removing power for a few seconds restores operation. All thermal events are counted.

PRESSURE WASHER ELECTRONICS

DESIGNED AND MADE IN ITALY

CONFIGURABLE WITH TESTERTLR

- Reset enabled: the end user resets maintenance with the button
- Unlimited operation: maintenance is signalled, reset via software only
- Dual-threshold lock: beyond the second threshold, unlock via software only
- Custom timing settings
- Enabling / disabling of functions and safety controls

Reset after an alarm: unless otherwise stated, remove power from the machine for a few seconds. Lockouts for missed maintenance can only be reset via software (service network).

LED SIGNALLING

SIGNAL	MEANING
LED 1 + LED 2 steady	Total lockout due to missed maintenance
LED 2 steady	Routine maintenance warning
LED 1 blink 1 s / 1 s	Machine inactive
LED 1 + 2 blink 2 s / 2 s	Pump lockout due to continuous operation
LED 1 + 2 blink 0.3 s / 0.3 s	Water-loss alarm
LED 1 + 2 blink 1 s / 1 s	Micro-leaks / false starts
LED 1 + 2 alternating 0.5 s / 0.5 s	High pump-motor temperature
LED 1 + 2 alternating 2 s / 2 s	Temperature restored

TLR-EC · Wiring diagram with contactor

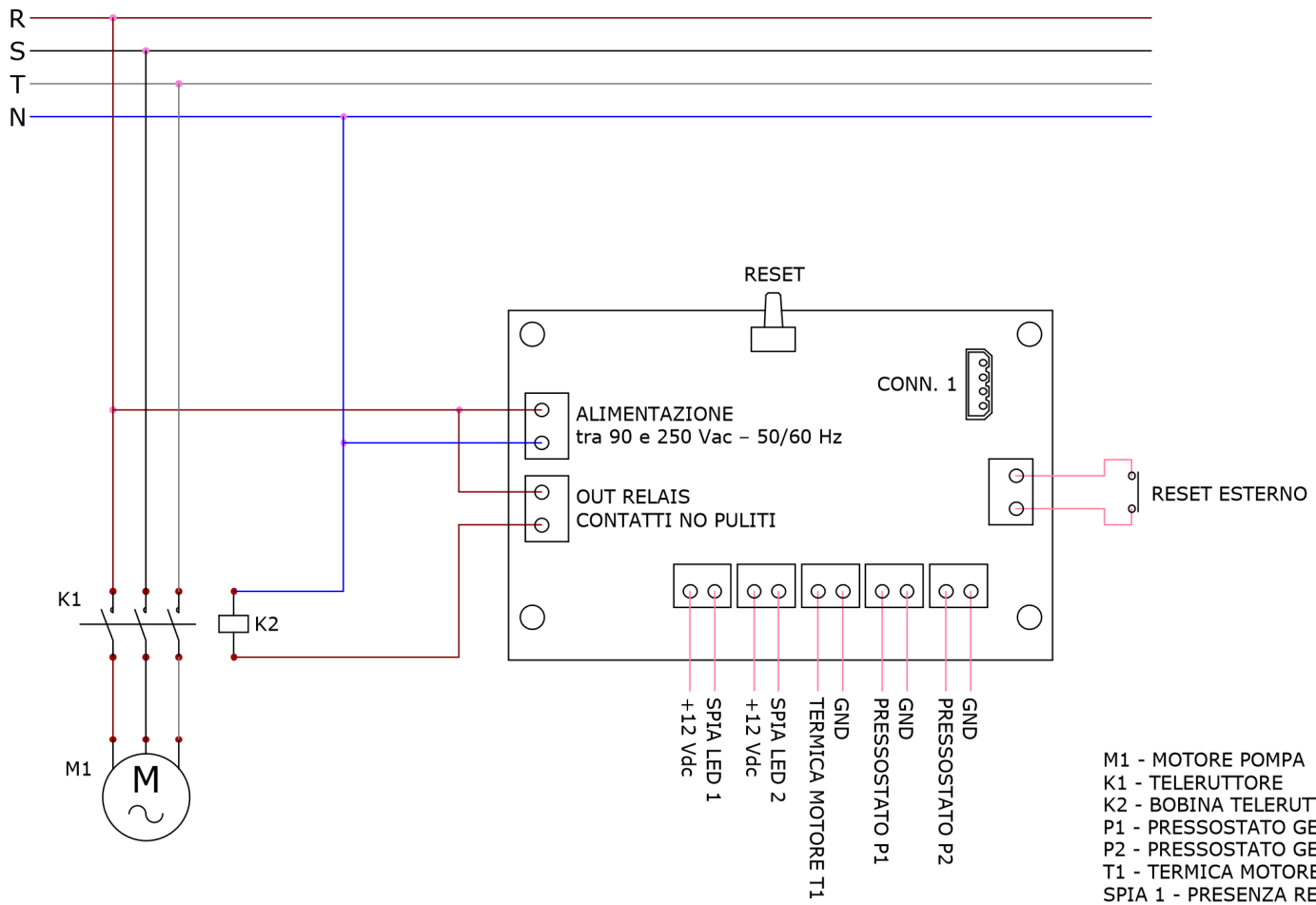

M1 - MOTORE POMPA
K1 - TELERUTTORE
K2 - BOBINA TELERUTTORE
P1 - PRESSOSTATO GENERALMENTE MONTATO SU POMPA
P2 - PRESSOSTATO GENERALMENTE MONTATO SU VALVOLA BYPASS
T1 - TERMICA MOTORE
SPIA 1 - PRESENZA RETE E AVVISO ALLARMI
SPIA 2 - ALLARMI
RESET - PULSANTE RIPRISTINO MANUTENZIONE.
RESET ESTERNO - RIPRISTINO FUNZIONI ESTERNO CONTATTI NO.
CONN 1 - CONNETTORE INTERFACCIA PC, PROGRAMMAZIONE, COLLAUDO E TEST.

Bilingual EN / IT legends as per manufacturer's diagram · Drawings not to scale

G.Milani s.a.s. · Via Cavaglietto 25, 28010 Cavaglio d'Agogna (NO) · +39 0322 80 68 20 · info@gmilani.it · gmilani.cloud