BASIC SERIES

TLR 6 FLW

CONTROL UNIT FOR COLD-WATER PRESSURE WASHERS

Pump timer with 3 × 20 A relays: the pump starts only when the pressure switch closes.

❄ Cold water | 230 Vac | 400 Vac | Made in Italy



POWER SUPPLY	PUMP 400 V	PUMP 230 V	DIMENSIONS
230 / 400 Vac	**5.5** kW · 7.5 HP	**4** kW · 5.4 HP	**110×55×48** mm

TECHNICAL DATA

Power supply	230 / 400 Vac, 50/60 Hz
Pump motor	400 V up to 5.5 kW / 7.5 HP · 230 V up to 4 kW / 5.4 HP
Pump output	3 independent 20 A power relays
Inputs	Low-voltage pressure switches (one or two)
Timing	7 s standard
Connections	6.3 mm Faston
Dimensions (L×W×H)	110 × 55 × 48 mm
Weight	550 g
Protection	Electronics encapsulated in epoxy resin

MAIN FUNCTIONS

- Pump activated only on pressure-switch closure
- No initial TotalStop at power-up
- 3 independent 20 A relays

DESCRIPTION

TLR 6 FLW controls cold-water pressure washers as a pump-motor timer, with a standard time of 7 seconds.

Like all FLW models it **does not perform the initial TotalStop**, whatever the state of the pressure switches at power-up: the pump starts only when the pressure-switch input closes.

PRESSURE WASHER ELECTRONICS

DESIGNED AND MADE IN ITALY

TLR 6 FLW · Wiring diagram

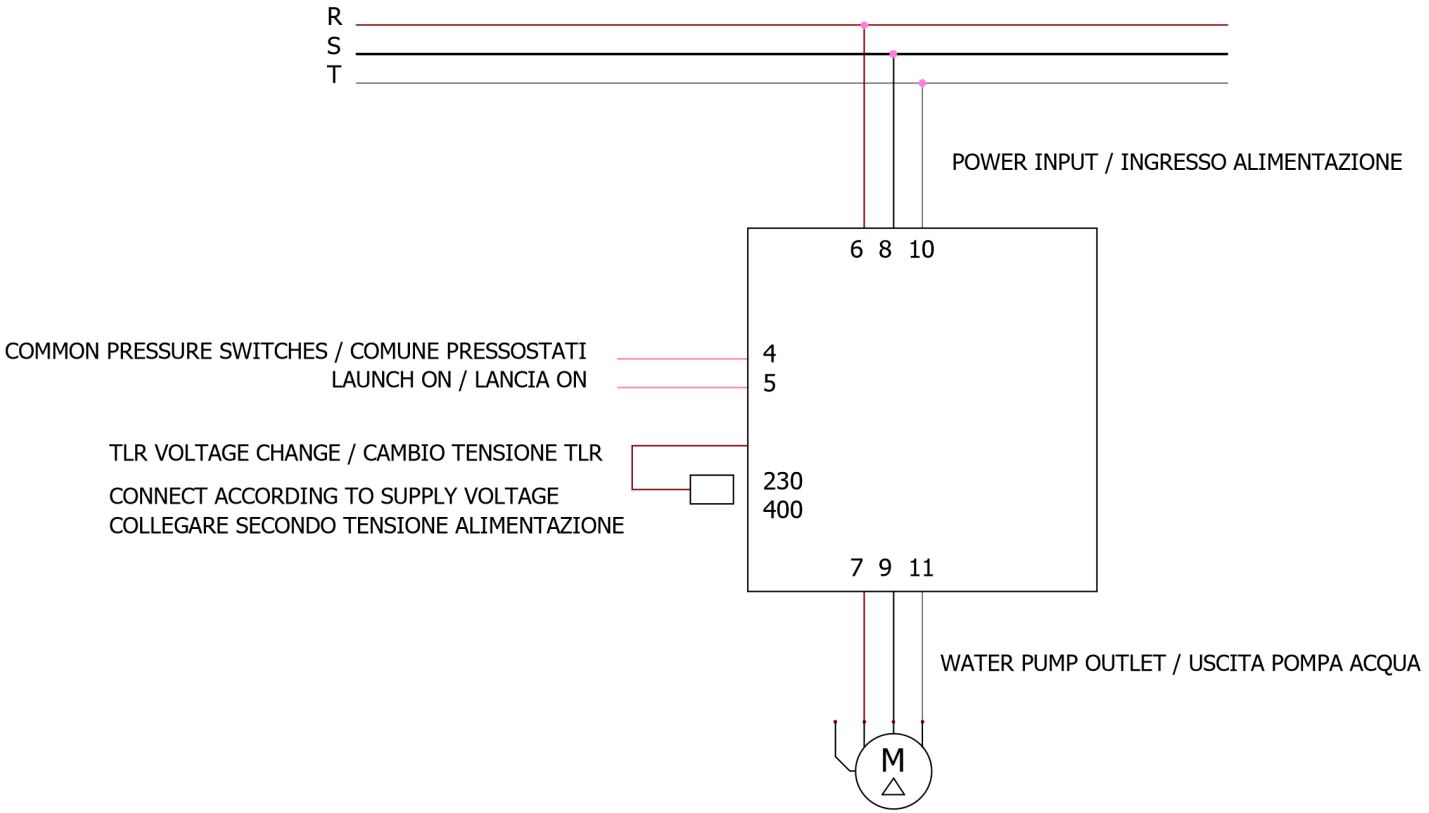

M1 -Water pump outlet / Uscita pompa acqua

In single phase do not use 10-11 / In monofase non usare 10-11

Bilingual EN / IT legends as per manufacturer's diagram · Drawings not to scale

G.Milani s.a.s. · Via Cavaglietto 25, 28010 Cavaglio d'Agogna (NO) · +39 0322 80 68 20 · info@gmilani.it · gmilani.cloud

TLR 6 FLW · Dimensions and pressure-switch connection

P1 - Pressure switch generally mounted on the pump / Pressostato generalmente monatato su Pompa
P2 - Pressure switch generally mounted on Bypass Valve / Pressostato generalmente montato su Valvola Bypass

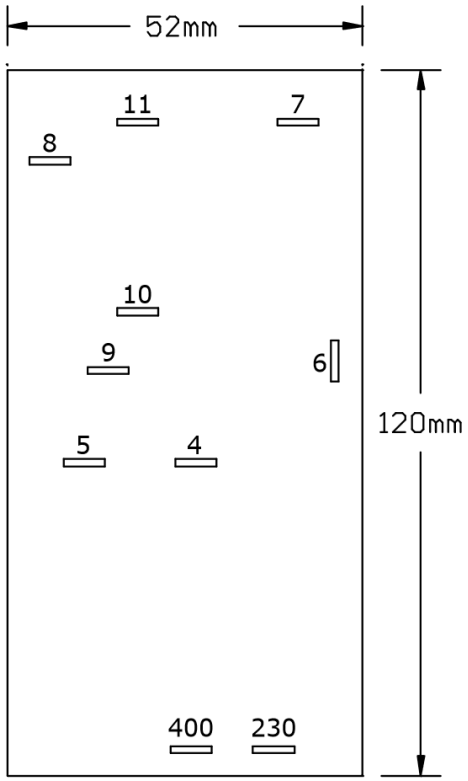

Example of pressure switch connection
Esempio collegamento pressostati

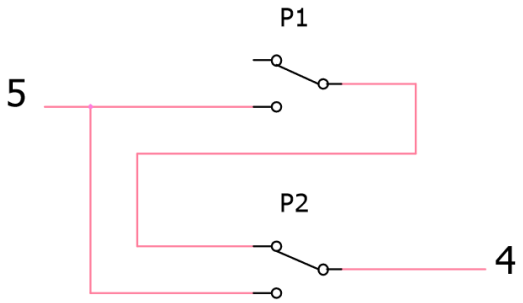

Bilingual EN / IT legends as per manufacturer's diagram · Drawings not to scale

G.Milani s.a.s. · Via Cavaglietto 25, 28010 Cavaglio d'Agogna (NO) · +39 0322 80 68 20 · info@gmilani.it · gmilani.cloud