ADVANCED SERIES

TLR 4 FTC

CONTROL UNIT FOR HOT-WATER PRESSURE WASHERS

TLR 4 FC goes microprocessor: flame photocell, thermostat and full diagnostics in the same footprint.

Hot water · Cold water · 230 Vac · 400 Vac

Made in Italy



POWER SUPPLY	PUMP 400 V	PUMP 230 V	DIMENSIONS
230 / 400 Vac	**4** kW · 5 HP	**3** kW · 4 HP	**85×68×47** mm

TECHNICAL DATA

Power supply	230 / 400 Vac, 50/60 Hz (selected with the black wire)
Pump motor	400 V up to 4 kW / 5 HP · 230 V up to 3 kW / 4 HP
Pump output	3 × 16 A relays
Diesel solenoid valve	10 A, NO clean contacts, 3 s delayed activation
Indicator	12 Vdc output, max 100 mA
Inputs	Low-voltage pressure switches · thermostat · flame photocell
Interface	PC connector (TesterTLR)
Connections	2.5 mm² power cables · 0.5 mm² control cables
Dimensions (L×W×H)	85 × 68 × 47 mm
Weight	480 g
Protection	Electronics encapsulated in epoxy resin

MAIN FUNCTIONS

- Flame photocell and thermostat: hot-circuit safety
- Fault, tampering or missing signal: hot section locked out
- Total hour-meter and hot-water hour-meter
- Maintenance warning with optional lockout at a second threshold
- Serial number for traceability
- Same footprint as TLR 4 FC

DESCRIPTION

TLR 4 FTC is the evolution of TLR 4 FC, fully microprocessor-controlled. Its dedicated connector, through an interface, connects to a PC running **TesterTLR**.

To keep the TLR 4 FC footprint, connections are made with cables. The model is not available in alternative versions: different solutions (potted or open-frame, with other connections) can be evaluated as a new design. Flame control can only be disabled via software.

PRESSURE WASHER ELECTRONICS

DESIGNED AND MADE IN ITALY

CONFIGURABLE WITH TESTERTLR

- Custom timing settings
- Enabling / disabling of functions and safety controls
- Individual test of every input and output
- Machine status monitoring during operation
- Serial number and hour-meter reading

Reset after an alarm: unless otherwise stated, remove power from the machine for a few seconds. Lockouts for missed maintenance can only be reset via software (service network).

ALARM SIGNALLING

SIGNAL	MEANING	RESET
Steady ON	Total lockout due to missed maintenance	Service network
1 blink	Recommended maintenance warning	Service network
2 blinks	Pump always active (lockout)	Remove power for a few seconds
3 blinks	Micro-leaks / false starts	Remove power for a few seconds
4 blinks	Inactivity lockout	Remove power for a few seconds
5 blinks	Water shortage lockout	Remove power for a few seconds
6 blinks	Boiler lockout due to missing flame	After 3 attempts it runs cold
Steady ON with 0.5 s OFF	Photocell fault (open or shorted)	Cold-mode operation

TLR 4 FTC · Wiring diagram

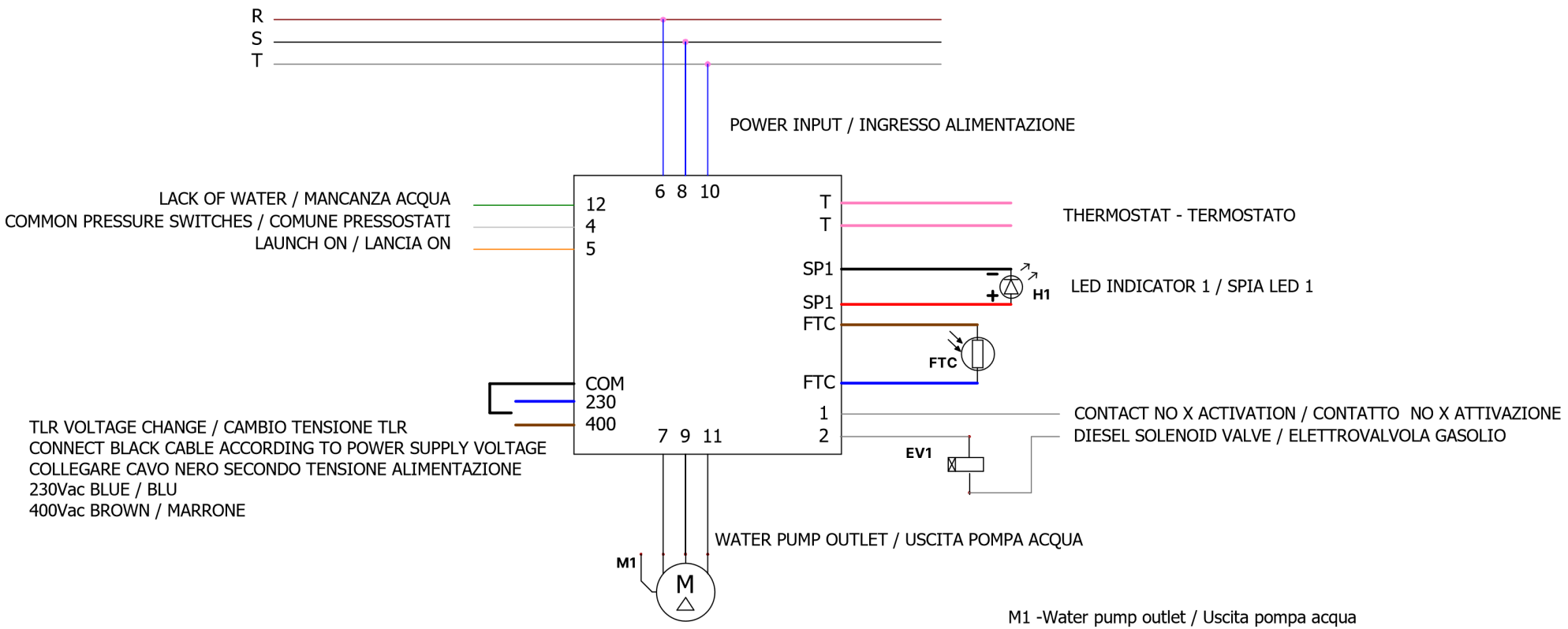

Bilingual EN / IT legends as per manufacturer's diagram · Drawings not to scale

G.Milani s.a.s. · Via Cavaglietto 25, 28010 Cavaglio d'Agogna (NO) · +39 0322 80 68 20 · info@gmilani.it · gmilani.cloud

TLR 4 FTC · Dimensions, pressure switches and fan / spark connection

M1 - Motor Pump / Motore Pompa
M2 - Smoke fan motor / Motore ventola fumi
T1 - Spark high voltage transformer / Trasformatore alta tensione scintilla
P1 - Pressure switch generally mounted on the pump / Pressostato generalmente monatato su Pompa
P2 - Pressure switch generally mounted on Bypass Valve / Pressostato generalmente montato su Valvola Bypass
CONN - PC interface connector, programming, testing and testing - Connettore interfaccia PC, programmazione, collaudo e test.

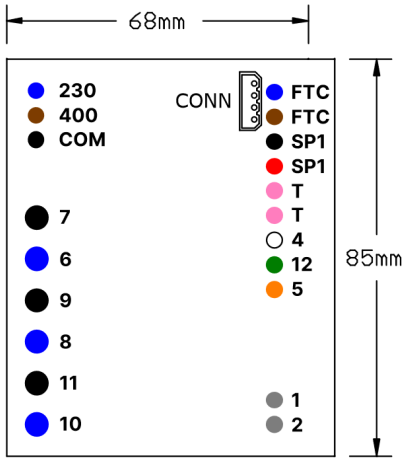

Example of pressure switch connection
Esempio collegamento pressostati

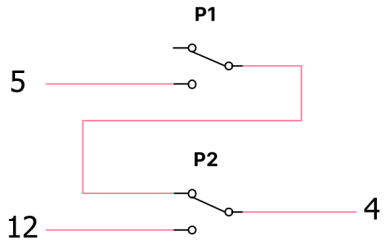

Example of Fan Motor and Spark Transformer connection
Esempio collegamento Motore Ventola e Trasformatore Scintilla

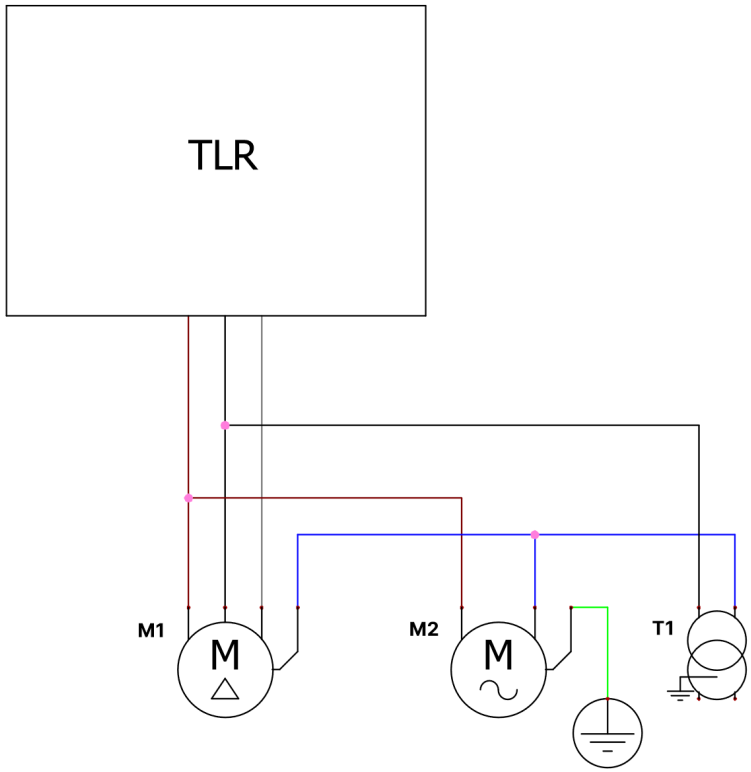

Bilingual EN / IT legends as per manufacturer's diagram · Drawings not to scale

G.Milani s.a.s. · Via Cavaglietto 25, 28010 Cavaglio d'Agogna (NO) · +39 0322 80 68 20 · info@gmilani.it · gmilani.cloud