BASIC SERIES

TLR 4 FLW

CONTROL UNIT FOR COLD-WATER PRESSURE WASHERS

Compact pump timer: start only with closed pressure switches, no initial pressurization cycle.

❄ Cold water | 230 Vac | 400 Vac | Made in Italy

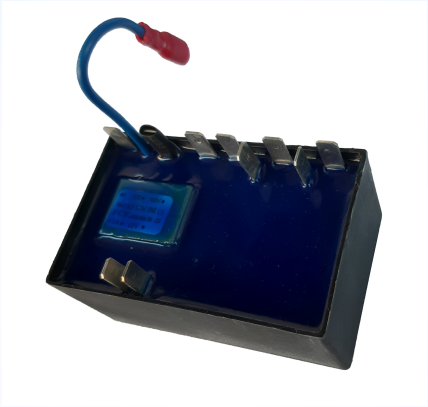

POWER SUPPLY	PUMP 400 V	PUMP 230 V	DIMENSIONS
230 / 400 Vac	**4** kW · 5 HP	**3** kW · 4 HP	**86×52×46** mm

TECHNICAL DATA

Power supply	230 / 400 Vac, 50/60 Hz
Pump motor	400 V up to 4 kW / 5 HP · 230 V up to 3 kW / 4 HP
Pump output	3 internal relays
Inputs	Low-voltage pressure switches
Timing	7 s standard
Connections	6.3 mm Faston
Dimensions (L×W×H)	86 × 52 × 46 mm
Weight	380 g
Protection	Electronics encapsulated in epoxy resin

MAIN FUNCTIONS

- Pump activated only with closed pressure switches
- No initial TotalStop at power-up
- Compact format

DESCRIPTION

TLR 4 FLW controls cold-water pressure washers as a simple pump-motor timer, with a standard delay of 7 seconds.

Unlike other TLR models, FLW versions **do not perform the initial TotalStop cycle** at power-up: the pump starts only with closed pressure-switch inputs.

PRESSURE WASHER ELECTRONICS

DESIGNED AND MADE IN ITALY

TLR 4 FLW · Wiring diagram

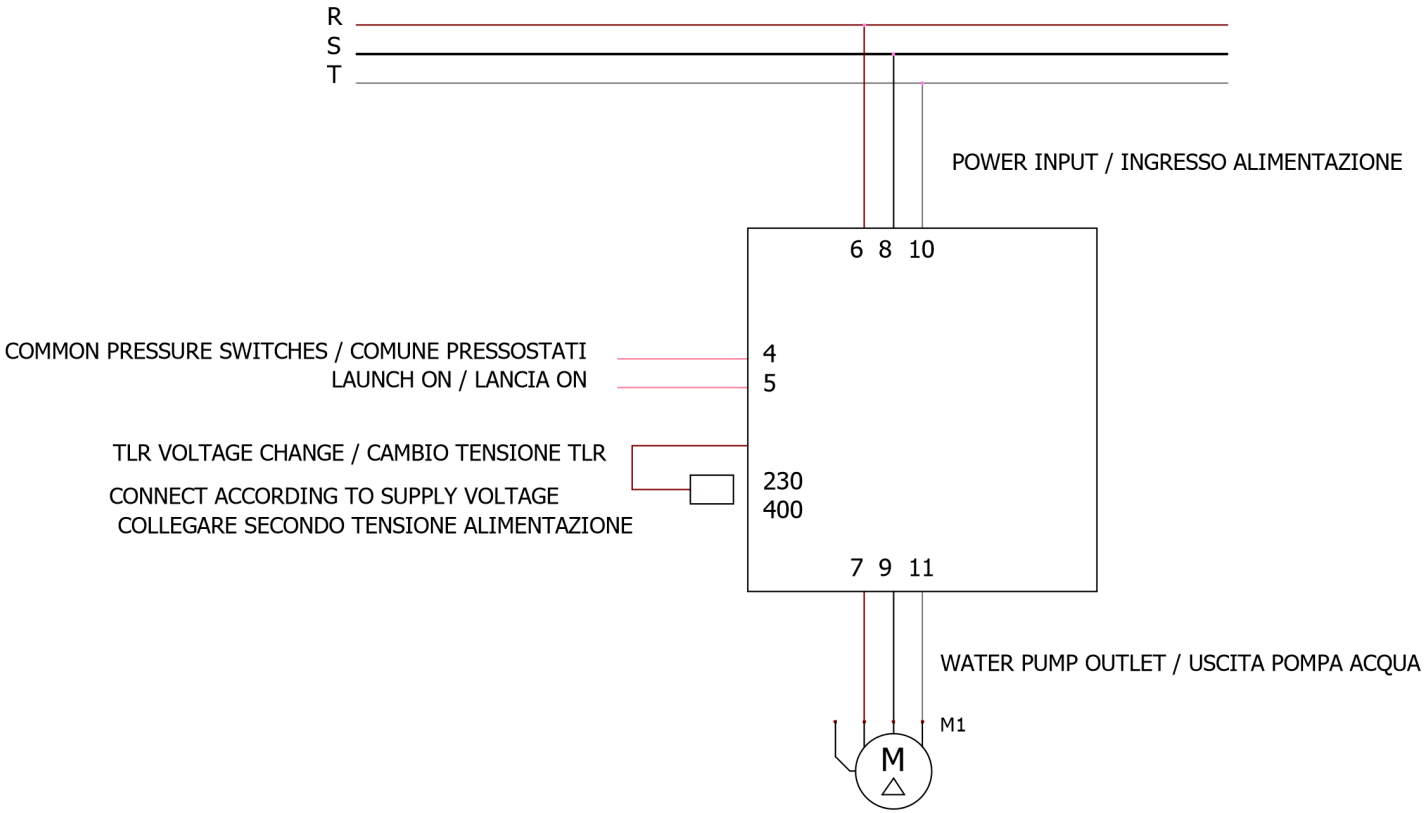

M1 -Water pump outlet / Uscita pompa acqua

In single phase do not use 10-11 / In monofase non usare 10-11

Bilingual EN / IT legends as per manufacturer's diagram · Drawings not to scale

G.Milani s.a.s. · Via Cavaglietto 25, 28010 Cavaglio d'Agogna (NO) · +39 0322 80 68 20 · info@gmilani.it · gmilani.cloud

TLR 4 FLW · Dimensions and pressure-switch connection

P1 - Pressure switch generally mounted on the pump / Pressostato generalmente monatato su Pompa
P2 - Pressure switch generally mounted on Bypass Valve / Pressostato generalmente montato su Valvola Bypass

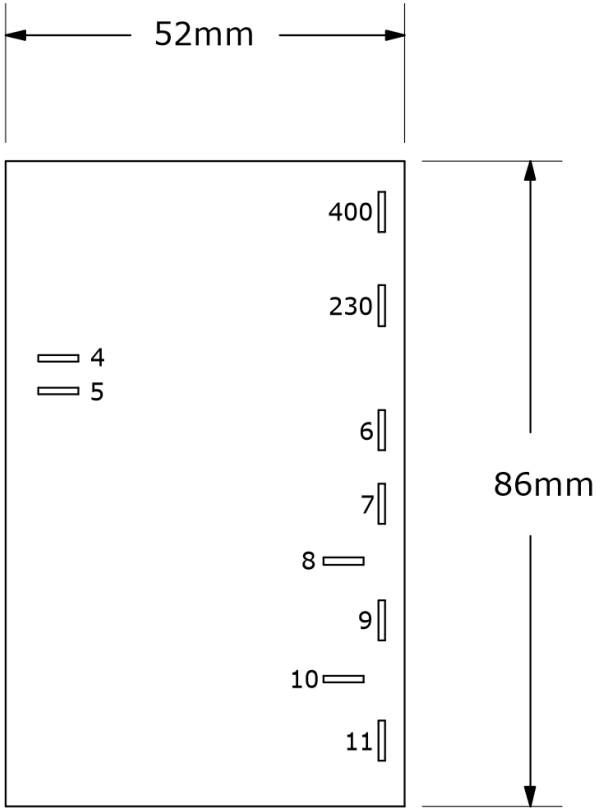

Height / Altezza 46mm

Example of pressure switch connection
Esempio collegamento pressostati

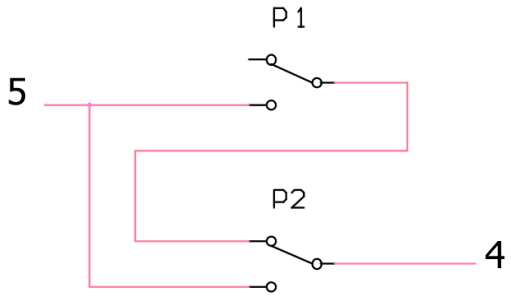

Bilingual EN / IT legends as per manufacturer's diagram · Drawings not to scale

G.Milani s.a.s. · Via Cavaglietto 25, 28010 Cavaglio d'Agogna (NO) · +39 0322 80 68 20 · info@gmilani.it · gmilani.cloud