STANDARD SERIES

TLR 4 FC

CONTROL UNIT FOR HOT-WATER PRESSURE WASHERS

The compact reference for hot-water machines: TOTALSTOP on all phases and diesel safety on water shortage.

Hot water | Cold water | 230 Vac | 400 Vac

Made in Italy



POWER SUPPLY	PUMP 400 V	PUMP 230 V	DIMENSIONS
230 / 400 Vac	**4** kW · 5 HP	**3** kW · 4 HP	**85×68×47** mm

TECHNICAL DATA

Power supply	230 / 400 Vac, 50/60 Hz
Pump motor	400 V up to 4 kW / 5 HP · single-phase up to 3 kW / 4 HP
Pump output	3 internal relays, all phases interrupted
Diesel solenoid valve	NO clean contacts, 3 s delayed activation
Inputs	4 pressure-switch inputs · low-voltage general ON/OFF
TotalStop	13 s standard
Connections	6.3 mm Faston
Dimensions (L×W×H)	85 × 68 × 47 mm
Weight	450 g
Protection	Electronics encapsulated in epoxy resin

MAIN FUNCTIONS

- TOTALSTOP function, 13 s standard delay
- Delayed diesel solenoid valve activation (3 s)
- Water shortage: diesel solenoid valve disabled at once
- Low-voltage switch to shut down the electronics

DESCRIPTION

TLR 4 FC controls pressure washers with a boiler for hot water. The **TOTALSTOP** function starts and stops the pump motor interrupting all phases, with a standard delay of 13 seconds.

The internal NO clean-contact relay drives the delayed activation of the diesel solenoid valve. The 4 pressure-switch inputs also act as safety controls: on water shortage the solenoid valve is disabled immediately.

PRESSURE WASHER ELECTRONICS

DESIGNED AND MADE IN ITALY

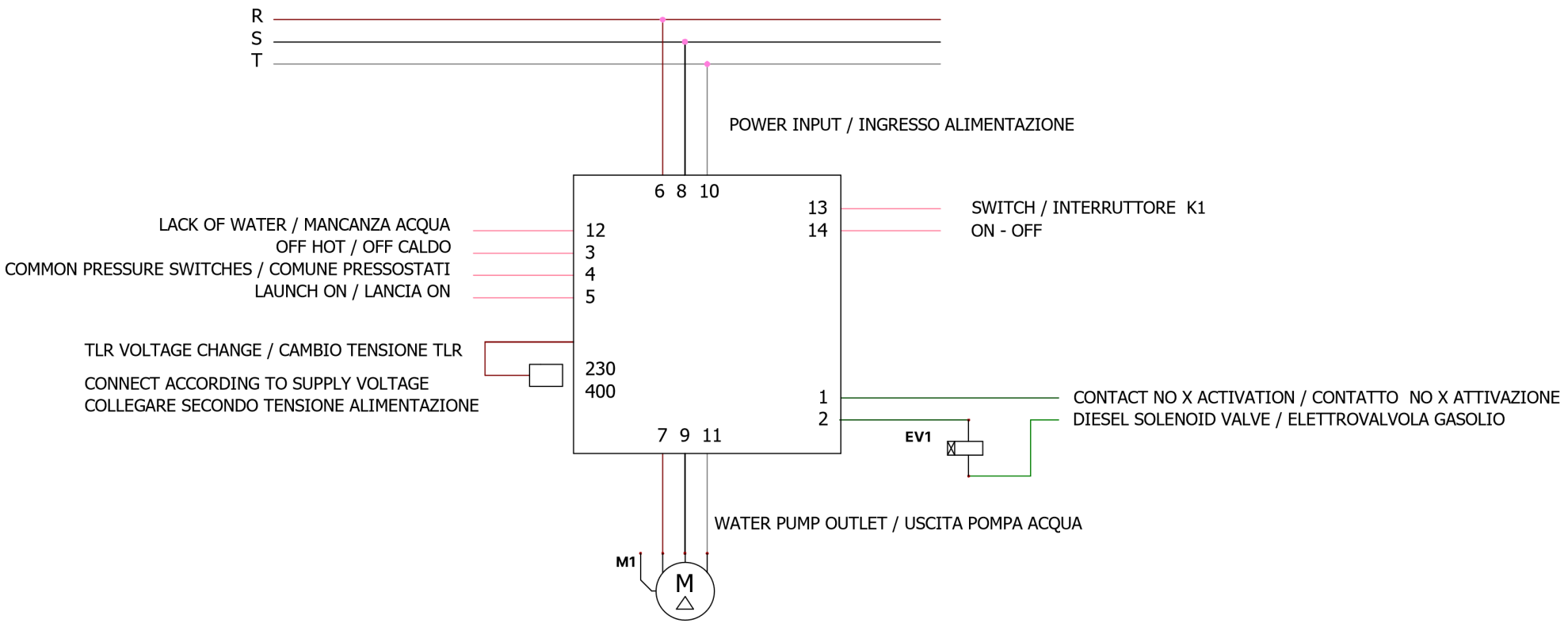

Bilingual EN / IT legends as per manufacturer's diagram · Drawings not to scale

G.Milani s.a.s. · Via Cavaglietto 25, 28010 Cavaglio d'Agogna (NO) · +39 0322 80 68 20 · info@gmilani.it · gmilani.cloud

TLR 4 FC · Dimensions, pressure switches and fan / spark connection

T1 - Spark high voltage transformer / Trasformatore alta tensione scintilla
M1 - Motor Pump / Motore Pompa
M2 - Smoke fan motor / Motore ventola fumi
P1 - Pressure switch generally mounted on the pump / Pressostato generalmente monatato su Pompa
P2 - Pressure switch generally mounted on Bypass Valve / Pressostato generalmente montato su Valvola Bypass

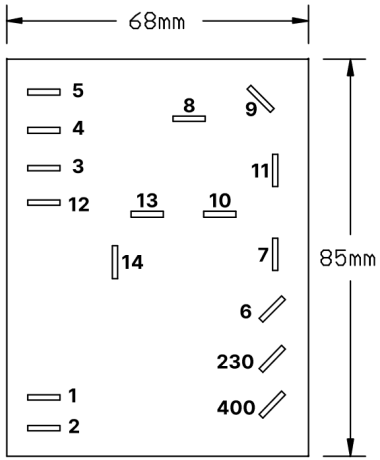

Example of pressure switch connection
Esempio collegamento pressostati

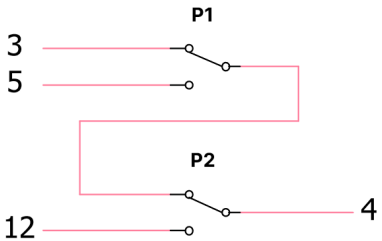

Example of Fan Motor and Spark Transformer connection
Esempio collegamento Motore Ventola e Trasformatore Scintilla

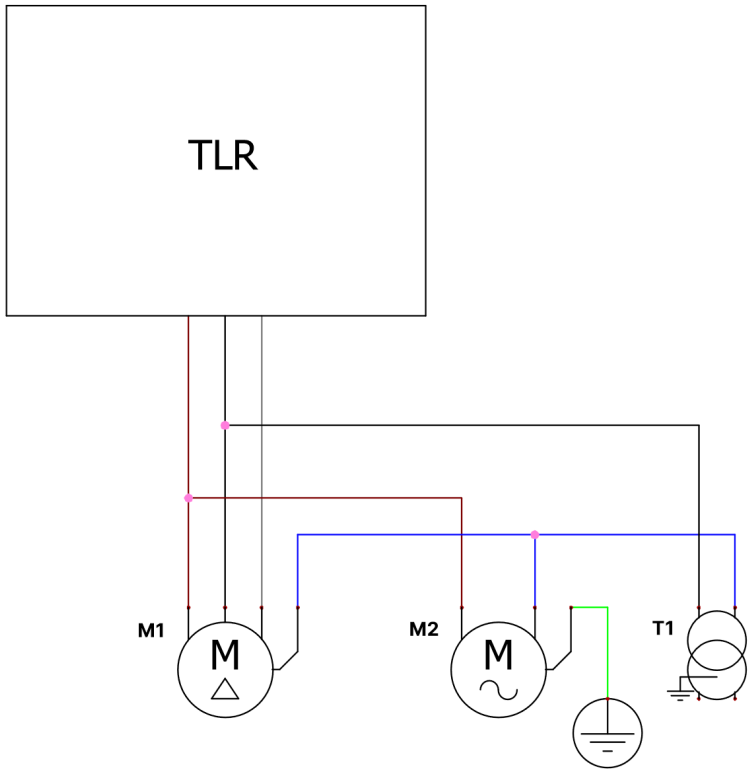

Bilingual EN / IT legends as per manufacturer's diagram · Drawings not to scale

G.Milani s.a.s. · Via Cavaglietto 25, 28010 Cavaglio d'Agogna (NO) · +39 0322 80 68 20 · info@gmilani.it · gmilani.cloud