STANDARD SERIES

TLR 4 F

CONTROL UNIT FOR COLD-WATER PRESSURE WASHERS

13-second TOTALSTOP for cold-water machines, in a compact format with low-voltage switch.

❄ Cold water · 230 Vac · 400 Vac · Made in Italy



POWER SUPPLY	PUMP 400 V	PUMP 230 V	DIMENSIONS
230 / 400 Vac	**4** kW · 5 HP	**3** kW · 4 HP	**85×68×47** mm

TECHNICAL DATA

Power supply	230 / 400 Vac, 50/60 Hz
Pump motor	400 V up to 4 kW / 5 HP · 230 V up to 3 kW / 4 HP
Pump output	3 internal relays
Inputs	Low-voltage pressure switches · low-voltage general ON/OFF
TotalStop	13 s standard
Connections	6.3 mm Faston
Dimensions (L×W×H)	85 × 68 × 47 mm
Weight	450 g
Protection	Electronics encapsulated in epoxy resin

MAIN FUNCTIONS

- TOTALSTOP function, 13 s standard delay
- Low-voltage switch to shut down the electronics
- Same format as the TLR 4 series

DESCRIPTION

TLR 4 F controls cold-water pressure washers. The **TOTALSTOP** function starts and stops the pump motor with a standard delay of 13 seconds.

A low-voltage switch can be connected to completely shut down the electronic section of the board.

PRESSURE WASHER ELECTRONICS

DESIGNED AND MADE IN ITALY

TLR 4 F · Wiring diagram

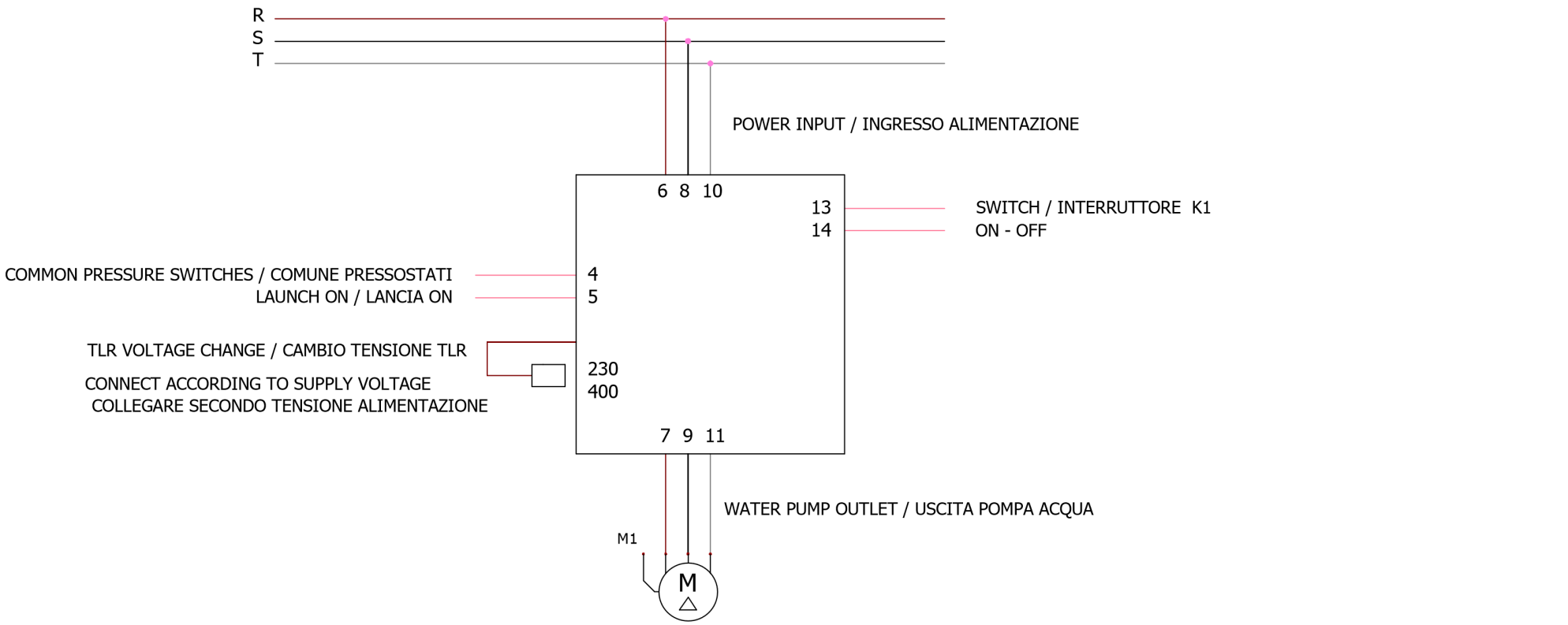

M1 -Water pump outlet / Uscita pompa acqua
K1 - Low Voltage Switch / Interruttore Bassa Tensione
In single phase do not use 10-11 / In monofase non usare 10-11

Bilingual EN / IT legends as per manufacturer's diagram · Drawings not to scale

G.Milani s.a.s. · Via Cavaglietto 25, 28010 Cavaglio d'Agogna (NO) · +39 0322 80 68 20 · info@gmilani.it · gmilani.cloud

TLR 4 F · Dimensions and pressure-switch connection

P1 - Pressure switch generally mounted on the pump / Pressostato generalmente monatato su Pompa
P2 - Pressure switch generally mounted on Bypass Valve / Pressostato generalmente montato su Valvola Bypass

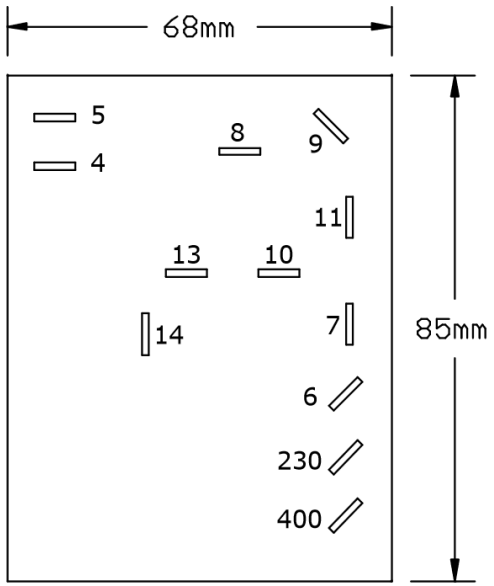

Example of pressure switch connection
Esempio collegamento pressostati

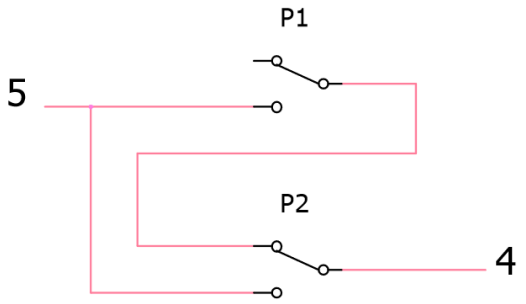

Bilingual EN / IT legends as per manufacturer's diagram · Drawings not to scale

G.Milani s.a.s. · Via Cavaglietto 25, 28010 Cavaglio d'Agogna (NO) · +39 0322 80 68 20 · info@gmilani.it · gmilani.cloud