ADVANCED SERIES

# TLR 4 EEP

## CONTROL UNIT FOR HOT-WATER PRESSURE WASHERS

Low-cost microprocessor control: universal power supply and safety functions selected when ordering, same wiring as TLR 4 FC.

Hot water · Cold water · 90–520 Vac · Made in Italy




| POWER SUPPLY | PUMP 400 V | PUMP 230 V | DIMENSIONS |
|---|---|---|---|
| **90–520** Vac | **4** kW · 5 HP | **3** kW · 4 HP | **85×68×47** mm |

## TECHNICAL DATA

| | |
|---|---|
| Power supply | 90–520 Vac, 50/60 Hz, automatic detection (electronics and pump) |
| Pump motor | 400 V up to 4 kW / 5 HP · 230 V up to 3 kW / 4 HP |
| Pump output | 3 internal relays |
| Diesel solenoid valve | Internal relay, NO clean contacts, delayed activation |
| Inputs | Low-voltage pressure switches · low-voltage general ON/OFF |
| Connections | 6.3 mm Faston |
| Dimensions (L×W×H) | 85 × 68 × 47 mm |
| Weight | 300 g |
| Protection | Electronics encapsulated in epoxy resin |

## MAIN FUNCTIONS

- Microprocessor control with stable timing
- Universal power supply with no configuration
- Timings and functions customizable when ordering
- Micro-leak, water-shortage and inactivity monitoring
- Same numbering and wiring as TLR 4 FC: direct replacement

## DESCRIPTION

TLR 4 EEP brings microprocessor control to pressure washers with a boiler while keeping costs low. It has no indicator LEDs, but the customer can choose timings and functions when ordering.

After an alarm, removing power for a few seconds restores operation. The internal NO clean-contact relay drives the delayed activation of the diesel solenoid valve.

PRESSURE WASHER ELECTRONICS

DESIGNED AND MADE IN ITALY

## FACTORY SETTINGS

| | |
|---|---|
| TotalStop | 13 s |
| Diesel solenoid valve delay | 3 s |
| Micro-leak control | Enabled · lockout after 10 micro-leaks within 12 s |
| Water shortage | Enabled · total lockout after 12 s |
| Inactivity lockout | Enabled · 1 hour |
| Pump always active lockout | Disabled |

**Reset after an alarm:** unless otherwise stated, remove power from the machine for a few seconds. Lockouts for missed maintenance can only be reset via software (service network).

# TLR 4 EEP · Wiring diagram

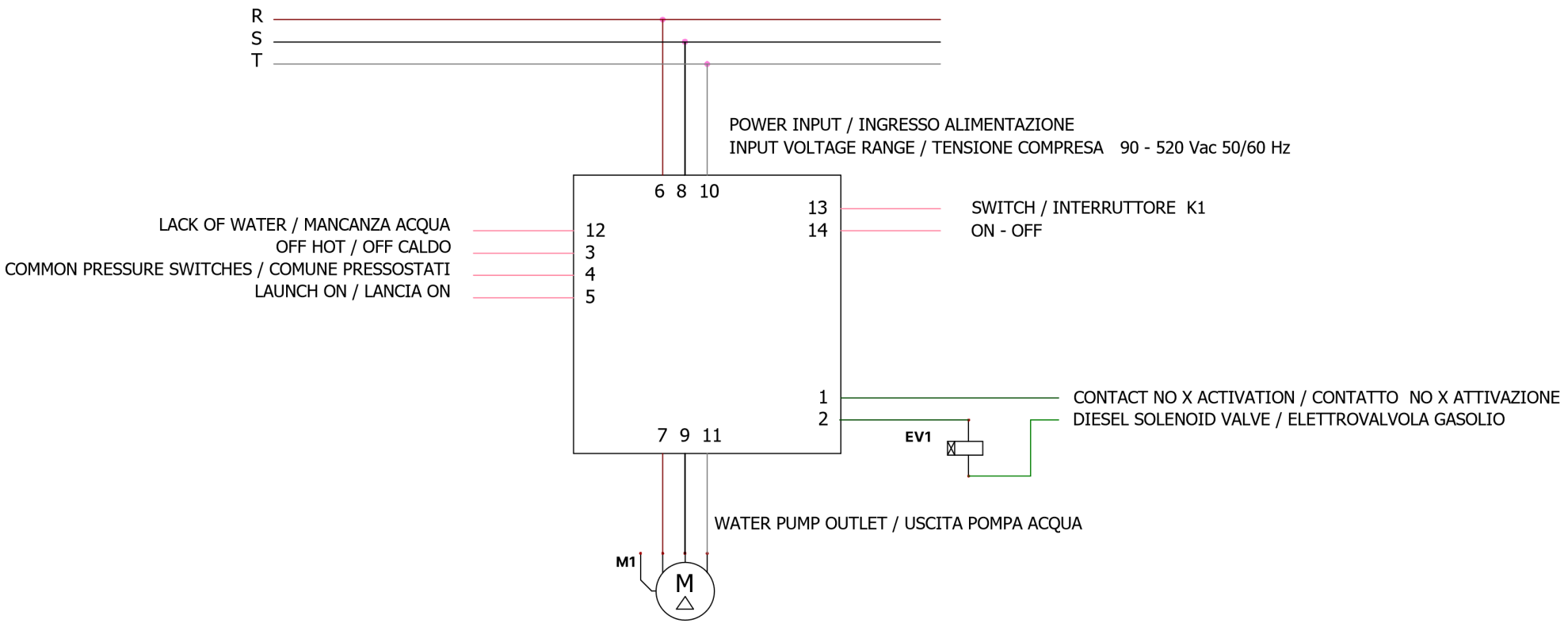


M1 -Water pump outlet / Uscita pompa acqua
EV1 - Diesel solenoid valve / Elettrovalvola Gasolio
K1 - Low Voltage Switch / Interruttore Bassa Tensione
In single phase do not use 10-11 / In monofase non usare 10-11

Bilingual EN / IT legends as per manufacturer's diagram · Drawings not to scale



G.Milani s.a.s. · Via Cavaglietto 25, 28010 Cavaglio d'Agogna (NO) · +39 0322 80 68 20 · info@gmilani.it · gmilani.cloud

# TLR 4 EEP · Dimensions, pressure switches and fan / spark connection

T1 - Spark high voltage transformer / Trasformatore alta tensione scintilla
M1 - Motor Pump / Motore Pompa
M2 - Smoke fan motor / Motore ventola fumi
F1 - Fuse / Fusibile
K1 - Low Voltage Switch / Interruttore Bassa Tensione
TM - motor safety thermal switch / Interruttore termica sicurezza motore
P1 - Pressure switch generally mounted on the pump / Pressostato generalmente monatato su Pompa
P2 - Pressure switch generally mounted on Bypass Valve / Pressostato generalmente montato su Valvola Bypass

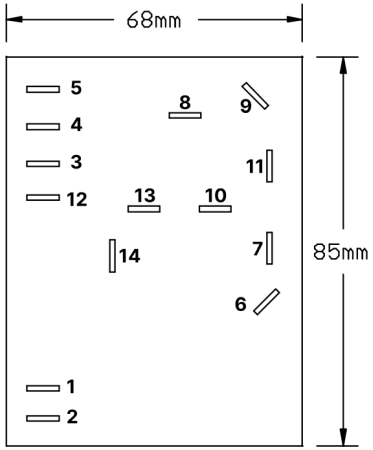


Example of pressure switch connection
Esempio collegamento pressostati

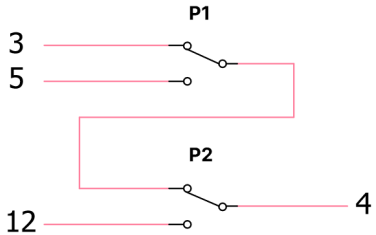


Example of Fan Motor and Spark Transformer connection
Esempio collegamento Motore Ventola e Trasformatore Scintilla

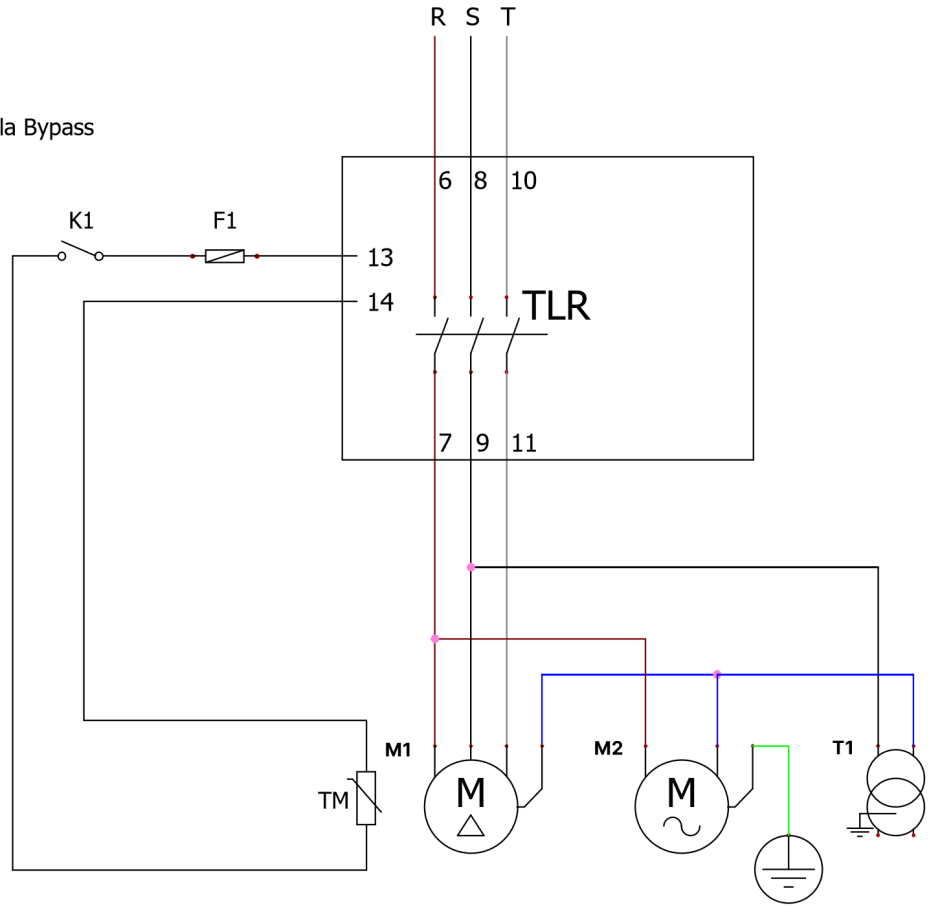


Bilingual EN / IT legends as per manufacturer's diagram · Drawings not to scale



G.Milani s.a.s. · Via Cavaglietto 25, 28010 Cavaglio d'Agogna (NO) · +39 0322 80 68 20 · info@gmilani.it · gmilani.cloud