PREMIUM SERIES

TLR 20

CONTROL UNIT FOR COLD-WATER PRESSURE WASHERS

The most powerful TLR: 90 A relays and dedicated 6 mm² wiring for motors up to 20 kW, with all the configurability of TLR 15.

❄ Cold water · 230 Vac · 400 Vac · Made in Italy

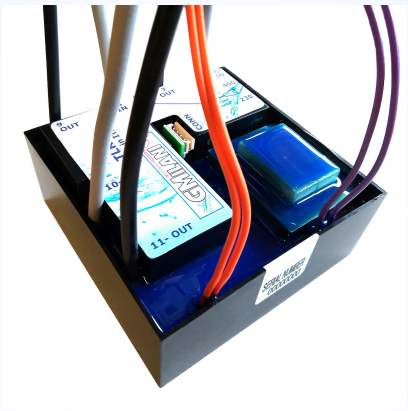

POWER SUPPLY	PUMP 400 V	PUMP 230 V	DIMENSIONS
230 / 400 Vac	**20** kW · 27 HP	**8** kW · 10.8 HP	**100×100×48** mm

TECHNICAL DATA

Power supply	230 / 400 Vac, 50/60 Hz
Pump motor	400 V up to 20 kW / 27 HP · 230 V up to 8 kW / 10.8 HP
Pump output	3 × 90 A relays
Auxiliary output	24 Vac, max 100 mA, function selectable via software
Inputs	Low-voltage pressure switches · low-voltage general ON/OFF
Timing	15 s standard (adjustable via software)
Connections	6 mm² power cables · 0.5 mm² control cables · Mammut-type terminal blocks
Dimensions (L×W×H)	100 × 100 × 48 mm
Weight	950 g
Protection	Electronics encapsulated in epoxy resin

MAIN FUNCTIONS

- Dedicated power wiring to exploit the full relay rating
- Microprocessor control, configurable with TesterTLR
- Serial number for traceability
- Total and partial hour-meter, maintenance warning
- Optional lockout at a second maintenance threshold
- 24 Vac output: external hour-meter (on request) or warning light

DESCRIPTION

TLR 20 extends the TLR range to the most powerful cold-water machines. Unlike TLR 15 it uses dedicated power and control cables, so the full relay current rating can be used, which is not possible with Faston connectors.

It works as a pump-motor timer (15 s standard). Timings, functions and hour-meters are managed with the **TesterTLR** software; the maintenance counter can only be reset via software.

PRESSURE WASHER ELECTRONICS

DESIGNED AND MADE IN ITALY

CONFIGURABLE WITH TESTERTLR

- External hour-meter mode: output active together with the pump
- Indicator mode: coded blink signalling
- Custom timing settings
- Enabling / disabling of functions and safety controls

Reset after an alarm: unless otherwise stated, remove power from the machine for a few seconds. Lockouts for missed maintenance can only be reset via software (service network).

SIGNALLING (24 VAC OUTPUT IN INDICATOR MODE)

SIGNAL	MEANING	RESET
Steady ON	Total lockout due to missed maintenance	Service network
1 blink	Recommended maintenance warning	Service network
2 blinks	Pump always active (lockout)	Remove power for a few seconds
3 blinks	Micro-leaks / false starts	Remove power for a few seconds
4 blinks	Inactivity lockout	Remove power for a few seconds

TLR 20 · Wiring diagram

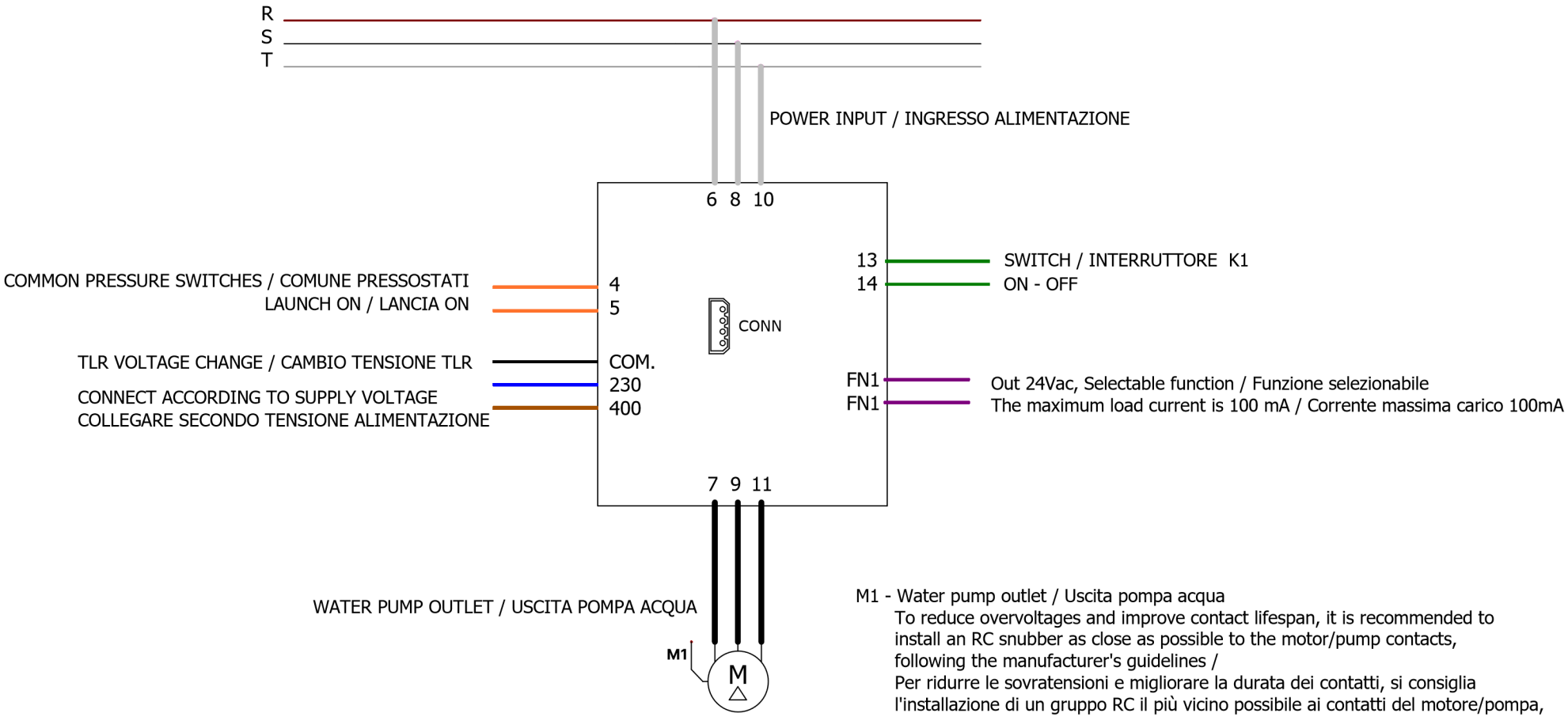

M1 - Water pump outlet / Uscita pompa acqua
To reduce overvoltages and improve contact lifespan, it is recommended to install an RC snubber as close as possible to the motor/pump contacts, following the manufacturer's guidelines /
Per ridurre le sovratensioni e migliorare la durata dei contatti, si consiglia l'installazione di un gruppo RC il più vicino possibile ai contatti del motore/pompa, seguendo le indicazioni del produttore del motore.
K1 - Low Voltage Switch / Interruttore Bassa Tensione
FN1 - 24VAC output, configurable via software:
For external hour meter / Per contaore esterno
As a warning indicator / Per spia segnalazione
CONN - Connector interface with PC / Connettore intefaccia PC
In single phase do not use 10-11 / In monofase non usare 10-11

Bilingual EN / IT legends as per manufacturer's diagram · Drawings not to scale

G.Milani s.a.s. · Via Cavaglietto 25, 28010 Cavaglio d'Agogna (NO) · +39 0322 80 68 20 · info@gmilani.it · gmilani.cloud

TLR 20 · Wiring, pressure switches and connection with main switch and thermal cut-out

P1 - Pressure switch generally mounted on the pump /
Pressostato generalmente montato su Pompa
P2 - Pressure switch generally mounted on Bypass valve /
Pressostato generalmente montato su Valvola Bypass
CONN - Programming interface connector with PC via TesterTlr software /
Connettore interfaccia programmazione tramite software TesterTlr

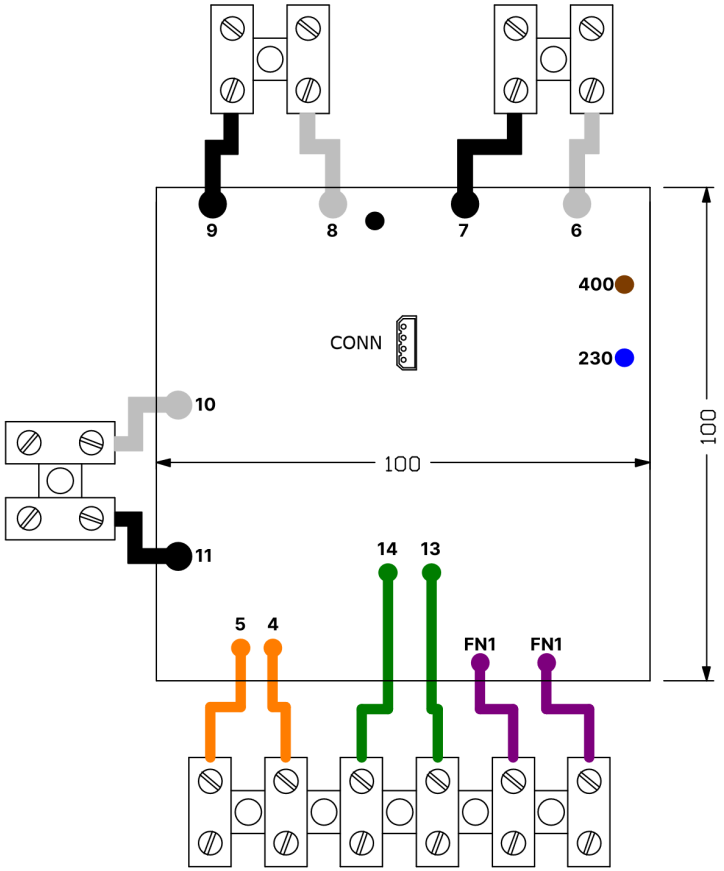

Example of pressure switch connection
Esempio collegamento pressostati

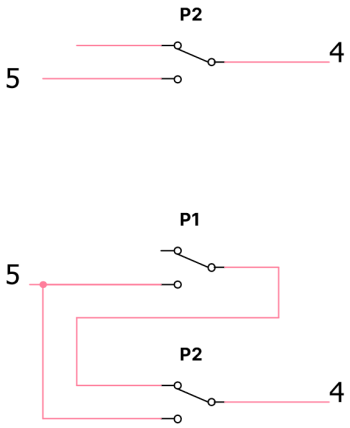

Example of a connection with main switch, fuse, and motor circuit breaker with 400Vac power supply
Esempio di collegamento con interruttore generale, fusibile e termica motore con alimentazione a 400Vac

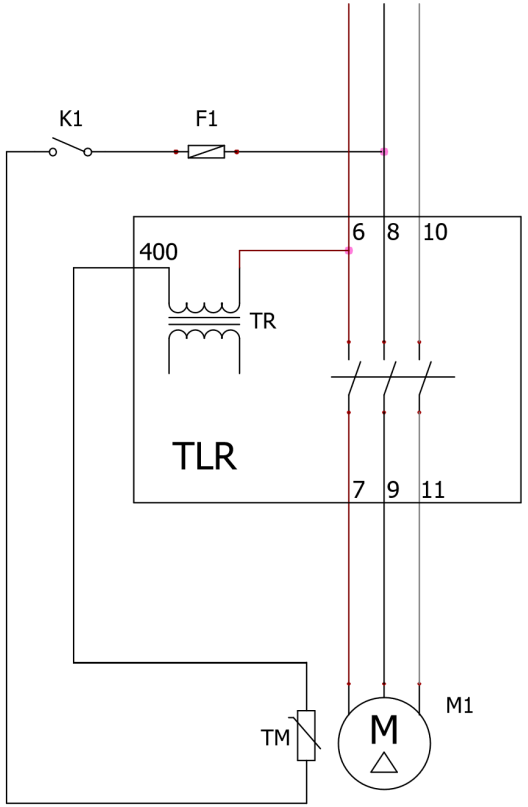

M1 - Motor pump / Motore pompa
TR - Internal TLR powre supply / Alimentazione interna
F1 - Fuse / Fusibile
K1 - Main switch / Interruttore generale
TM - Motor safety thermal switch / Interruttore termica sicurezza motore

Bilingual EN / IT legends as per manufacturer's diagram · Drawings not to scale

G.Milani s.a.s. · Via Cavaglietto 25, 28010 Cavaglio d'Agogna (NO) · +39 0322 80 68 20 · info@gmilani.it · gmilani.cloud