BASIC SERIES

TLR 2

CONTROL UNIT FOR 400 VAC PRESSURE WASHERS

Essential TOTALSTOP for three-phase machines: two relays, two phases interrupted and built-in diesel delay.

Hot water · Cold water · 400 Vac · Made in Italy



POWER SUPPLY	PUMP 400 V	TOTALSTOP	DIMENSIONS
400 Vac	**4** kW · 5 HP	**8** s	**85×68×47** mm

TECHNICAL DATA

Power supply	400 Vac, 50/60 Hz
Pump motor	Up to 4 kW / 5 HP
Pump output	2 internal relays, two phases interrupted
Diesel solenoid valve	NO clean contacts, 3 s delayed activation
Inputs	Low-voltage pressure switches · separate electronics supply
TotalStop	8 s standard
Connections	6.3 mm Faston
Dimensions (L×W×H)	85 × 68 × 47 mm
Weight	440 g
Protection	Electronics encapsulated in epoxy resin

MAIN FUNCTIONS

- TOTALSTOP function, 8 s standard delay
- Delayed diesel solenoid valve activation (3 s)
- Separate supply input for complete shutdown

DESCRIPTION

TLR 2 controls 400 Vac pressure washers with a boiler. The **TOTALSTOP** function starts and stops the pump motor interrupting two phases, with a standard delay of 8 seconds.

The internal NO clean-contact relay drives the delayed activation (3 s) of the diesel solenoid valve.

PRESSURE WASHER ELECTRONICS

DESIGNED AND MADE IN ITALY

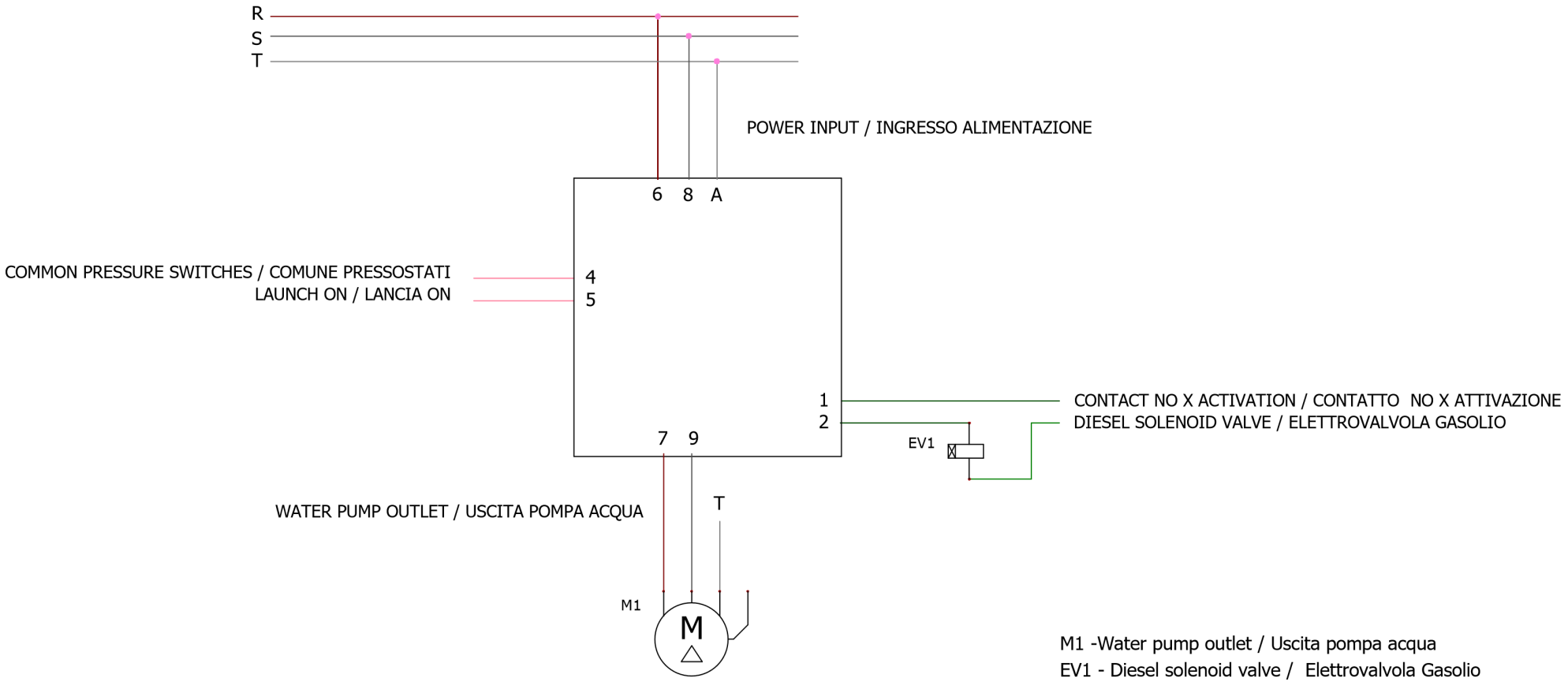

Bilingual EN / IT legends as per manufacturer's diagram · Drawings not to scale

G.Milani s.a.s. · TLR 2 · Rev. 11/2026

TLR 2 · Dimensions, pressure switches and connection with main switch and thermal cut-out

T1 - Spark high voltage transformer / Trasformatore alta tensione scintilla
M1 - Motor Pump / Motore Pompa
M2 - Smoke fan motor / Motore ventola fumi
P1 - Pressure switch generally mounted on the pump / Pressostato generalmente monatato su Pompa
P2 - Pressure switch generally mounted on Bypass Valve / Pressostato generalmente montato su Valvola Bypass
TR- Internal TLR power supply / Alimentazione interna TLR
F1 - Fuse / Fusibile
K1 - Main switch / Interruttore generale
TM - motor safety thermal switch / Interruttore termica sicurezza motore

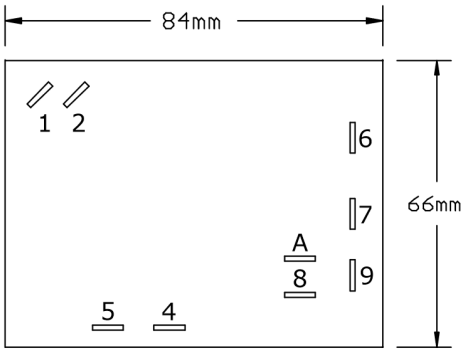

Example of pressure switch connection
Esempio collegamento pressostati

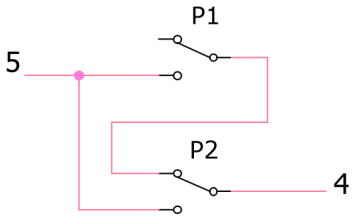

Example of Fan Motor and Spark Transformer connection
Esempio collegamento Motore Ventola e Trasformatore Scintilla

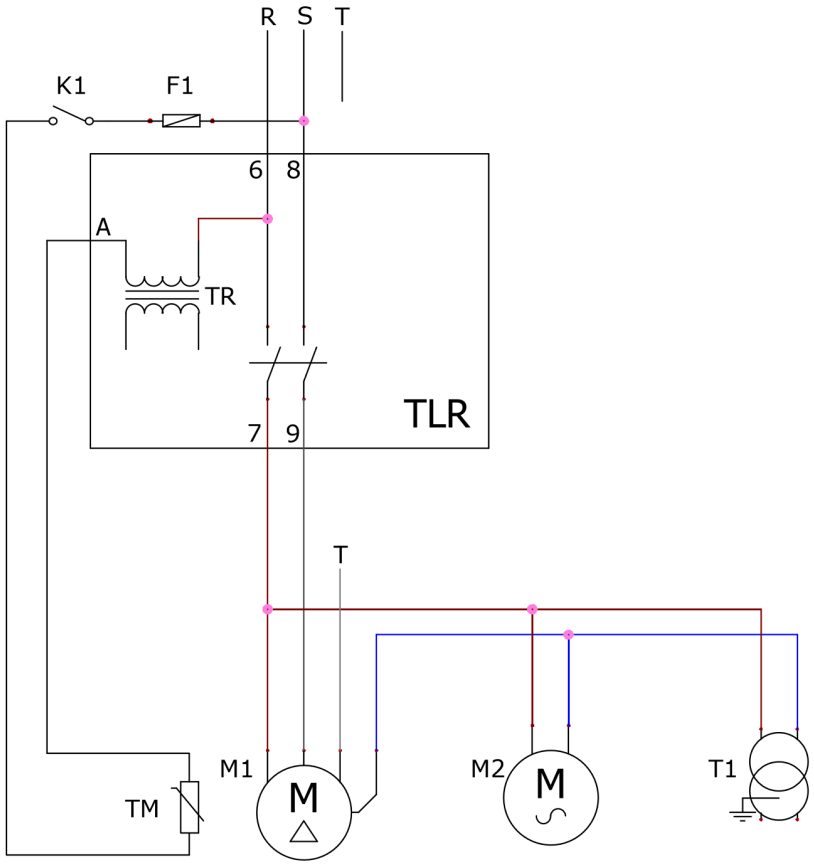

Bilingual EN / IT legends as per manufacturer's diagram · Drawings not to scale

G.Milani s.a.s. · Via Cavaglietto 25, 28010 Cavaglio d'Agogna (NO) · +39 0322 80 68 20 · info@gmilani.it · gmilani.cloud