ADVANCED SERIES

TLR 11 CNT

CONTROL UNIT FOR HOT-WATER PRESSURE WASHERS

The microprocessor evolution of TLR 11: universal power supply, hour-meter, maintenance and diagnostics with a dedicated warning light.

Hot water · Cold water · 90–520 Vac · Made in Italy



POWER SUPPLY	PUMP 400 V	PUMP 230 V	DIMENSIONS
90–520 Vac	**7.5** kW · 10 HP	**5.5** kW · 7.5 HP	**100×100×48** mm

TECHNICAL DATA

Power supply	90–520 Vac, 50/60 Hz, automatic voltage detection
Pump motor	400 V up to 7.5 kW / 10 HP · 230 V up to 5.5 kW / 7.5 HP
Pump output	3 internal relays
Diesel solenoid valve	NO clean contacts, 3 s delayed activation
Indicator	12 Vdc output, max 100 mA
Inputs	4 pressure-switch inputs · low-voltage general ON/OFF
Interface	PC connector (TesterTLR)
Connections	6.3 mm Faston
Dimensions (L×W×H)	100 × 100 × 48 mm
Weight	530 g
Protection	Electronics encapsulated in epoxy resin

MAIN FUNCTIONS

- Universal power supply with no adjustments
- Total hour-meter and hot-water hour-meter
- Maintenance warning with optional lockout at a second threshold
- Water shortage: diesel disabled at once, pump stops after TotalStop
- Micro-leak, inactivity and continuous-operation monitoring
- Serial number for traceability

DESCRIPTION

TLR 11 CNT is the evolution of TLR 11, now fully microprocessor-controlled. Through its connector and a dedicated interface it connects to a PC: with **TesterTLR** you set timings and controls, test inputs and outputs and monitor the running machine.

The 4 pressure-switch inputs also act as safety controls: on water shortage the diesel solenoid valve is disabled immediately and the pump stops after the configured TotalStop delay.

PRESSURE WASHER ELECTRONICS

DESIGNED AND MADE IN ITALY

CONFIGURABLE WITH TESTERTLR

- Custom timing settings
- Enabling / disabling of functions and safety controls
- Individual test of every input and output
- Machine status monitoring during operation
- Serial number and hour-meter reading

Reset after an alarm: unless otherwise stated, remove power from the machine for a few seconds. Lockouts for missed maintenance can only be reset via software (service network).

ALARM SIGNALLING

SIGNAL	MEANING	RESET
Steady ON	Total lockout due to missed maintenance	Service network
1 blink	Recommended maintenance warning	Service network
2 blinks	Pump always active (lockout)	Remove power for a few seconds
3 blinks	Micro-leaks / false starts	Remove power for a few seconds
4 blinks	Inactivity lockout	Remove power for a few seconds
5 blinks	Water shortage lockout	Remove power for a few seconds

TLR 11 CNT · Wiring diagram

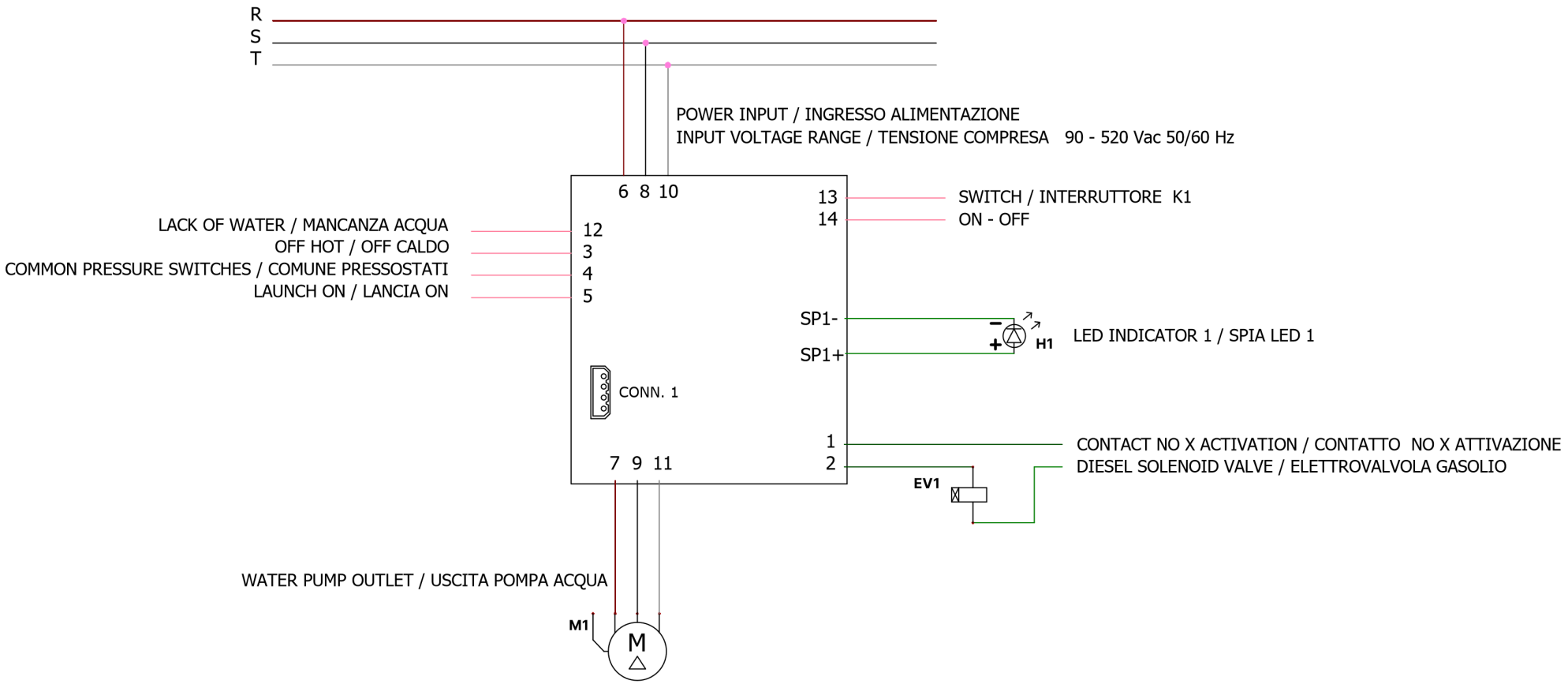

M1 -Water pump outlet / Uscita pompa acqua
EV1 - Diesel solenoid valve / Elettrovalvola Gasolio
K1 - Low Voltage Switch / Interruttore Bassa Tensione
H1 - 12Vdc Warning Light / Spia Segnalazione
CONN 1 - Connector interface with PC / Connettore intefaccia PC
In single phase do not use 10-11 / In monofase non usare 10-11

Bilingual EN / IT legends as per manufacturer's diagram · Drawings not to scale

G.Milani s.a.s. · Via Cavaglietto 25, 28010 Cavaglio d'Agogna (NO) · +39 0322 80 68 20 · info@gmilani.it · gmilani.cloud

TLR 11 CNT · Dimensions, pressure switches and fan / spark connection

T1 - Spark high voltage transformer / Trasformatore alta tensione scintilla
M1 - Motor Pump / Motore Pompa
M2 - Smoke fan motor / Motore ventola fumi
P1 - Pressure switch generally mounted on the pump / Pressostato generalmente monatato su Pompa
P2 - Pressure switch generally mounted on Bypass Valve / Pressostato generalmente montato su Valvola Bypass

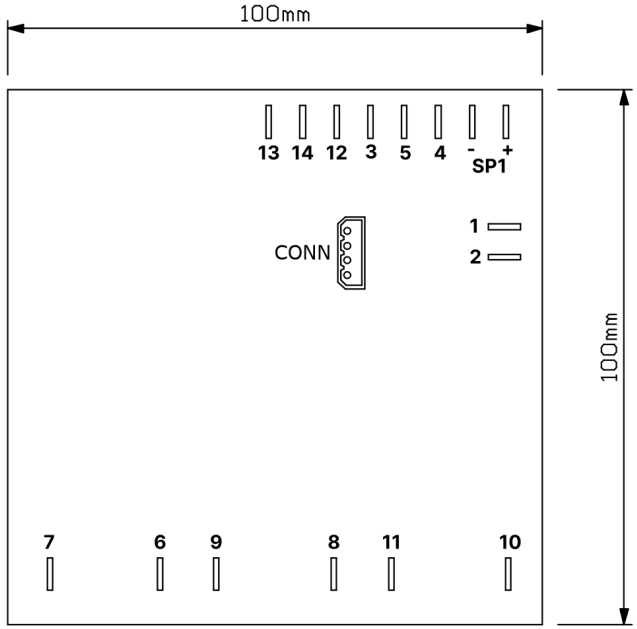

Example of pressure switch connection
Esempio collegamento pressostati

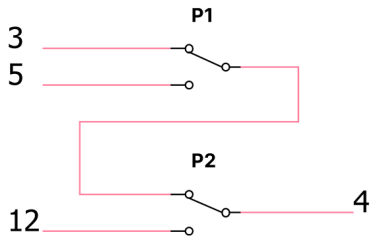

Example of Fan Motor and Spark Transformer connection
Esempio collegamento Motore Ventola e Trasformatore Scintilla

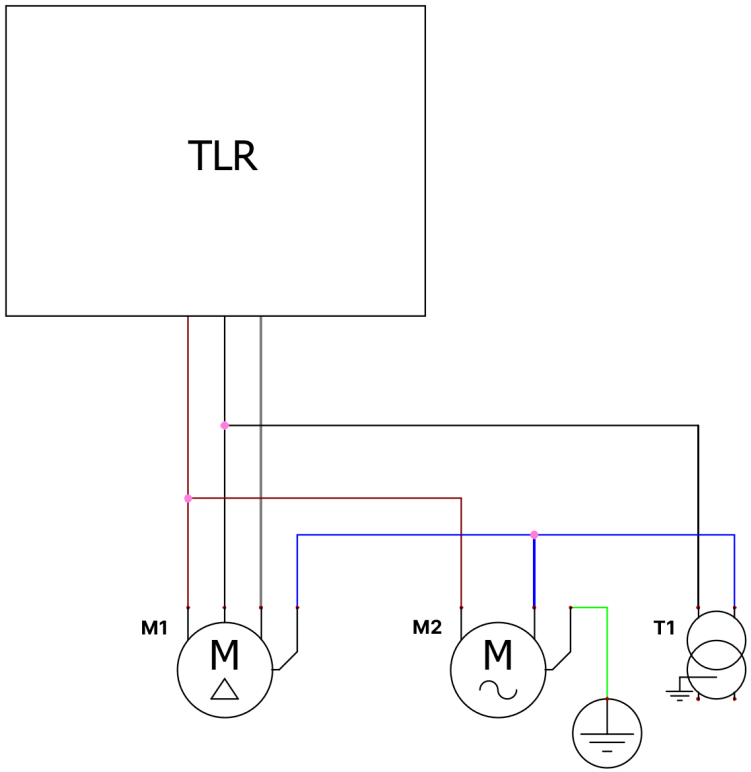

Bilingual EN / IT legends as per manufacturer's diagram · Drawings not to scale

G.Milani s.a.s. · Via Cavaglietto 25, 28010 Cavaglio d'Agogna (NO) · +39 0322 80 68 20 · info@gmilani.it · gmilani.cloud