STANDARD SERIES

TLR 11

CONTROL UNIT FOR HOT-WATER PRESSURE WASHERS

Complete management of hot-water machines with built-in transformer and 24 Vac auxiliary output: fully self-contained.

Hot water · Cold water · 230 Vac · 400 Vac · Made in Italy

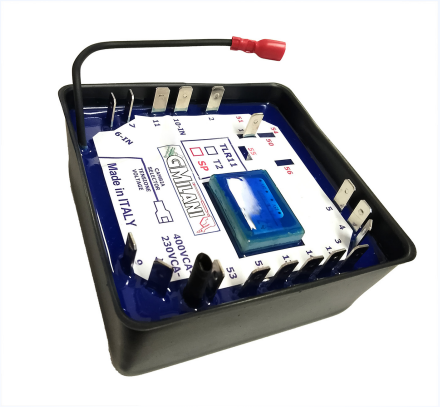

POWER SUPPLY	PUMP 400 V	PUMP 230 V	DIMENSIONS
230 / 400 Vac	**7.5** kW · 10 HP	**5.5** kW · 7.5 HP	**99×99×48** mm

TECHNICAL DATA

Power supply	230 / 400 Vac, 50/60 Hz
Pump motor	400 V up to 7.5 kW / 10 HP · 230 V up to 5.5 kW / 7.5 HP
Pump output	3 internal relays
Diesel solenoid valve	NO clean contacts, 3 s delayed activation
Auxiliary output	24 Vac, max 150 mA (built-in transformer)
Inputs	4 pressure-switch inputs · low-voltage general ON/OFF
TotalStop	12 s standard
Connections	6.3 mm Faston
Dimensions (L×W×H)	99 × 99 × 48 mm
Weight	750 g
Protection	Electronics encapsulated in epoxy resin

MAIN FUNCTIONS

- TOTALSTOP function, 12 s standard delay
- Built-in transformer: self-contained board
- 24 Vac output for solenoid valve and mains-presence light
- Water shortage: diesel solenoid valve disabled at once
- Input for complete machine shutdown

DESCRIPTION

TLR 11 is designed for the complete management of pressure washers with a boiler. Its main function, **TOTALSTOP**, manages pump-motor shutdown with a standard delay of 12 seconds.

The internal NO clean-contact relay drives the delayed activation (3 s) of the diesel solenoid valve. The 4 pressure-switch inputs also act as safety controls: on water shortage the solenoid valve is disabled immediately.

PRESSURE WASHER ELECTRONICS

DESIGNED AND MADE IN ITALY

TLR 11 · Wiring diagram

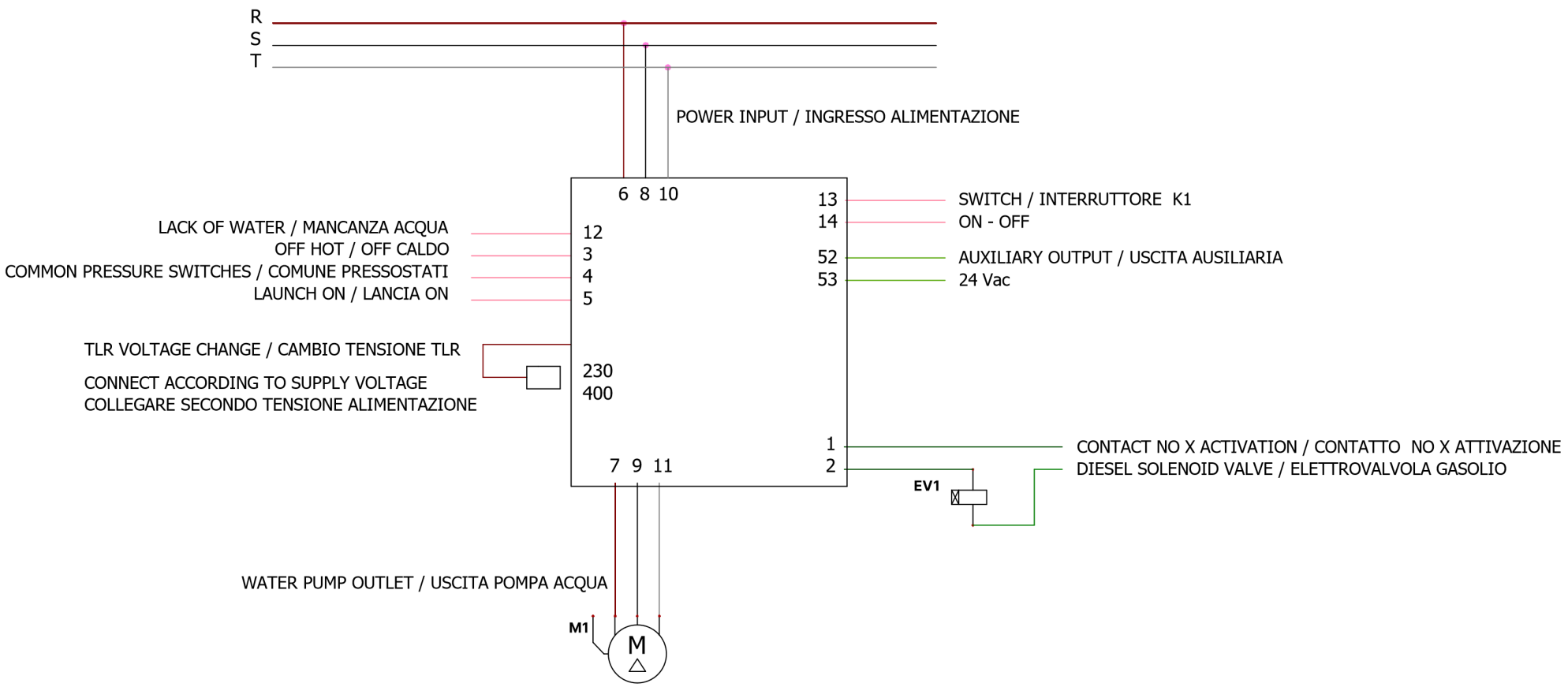

Bilingual EN / IT legends as per manufacturer's diagram · Drawings not to scale

G.Milani s.a.s. · Via Cavaglietto 25, 28010 Cavaglio d'Agogna (NO) · +39 0322 80 68 20 · info@gmilani.it · gmilani.cloud

TLR 11 · Dimensions, pressure switches and fan / spark connection

T1 - Spark high voltage transformer / Trasformatore alta tensione scintilla
M1 - Motor Pump / Motore Pompa
M2 - Smoke fan motor / Motore ventola fumi
P1 - Pressure switch generally mounted on the pump / Pressostato generalmente monatato su Pompa
P2 - Pressure switch generally mounted on Bypass Valve / Pressostato generalmente montato su Valvola Bypass

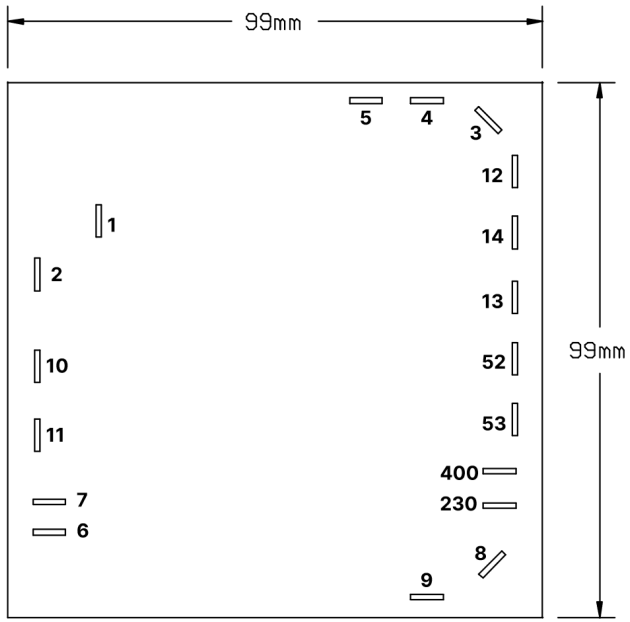

Example of pressure switch connection
Esempio collegamento pressostati

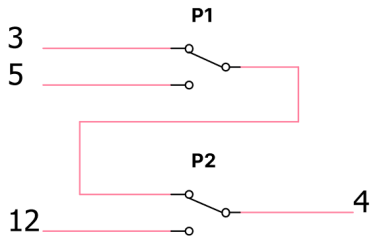

Example of Fan Motor and Spark Transformer connection
Esempio collegamento Motore Ventola e Trasformatore Scintilla

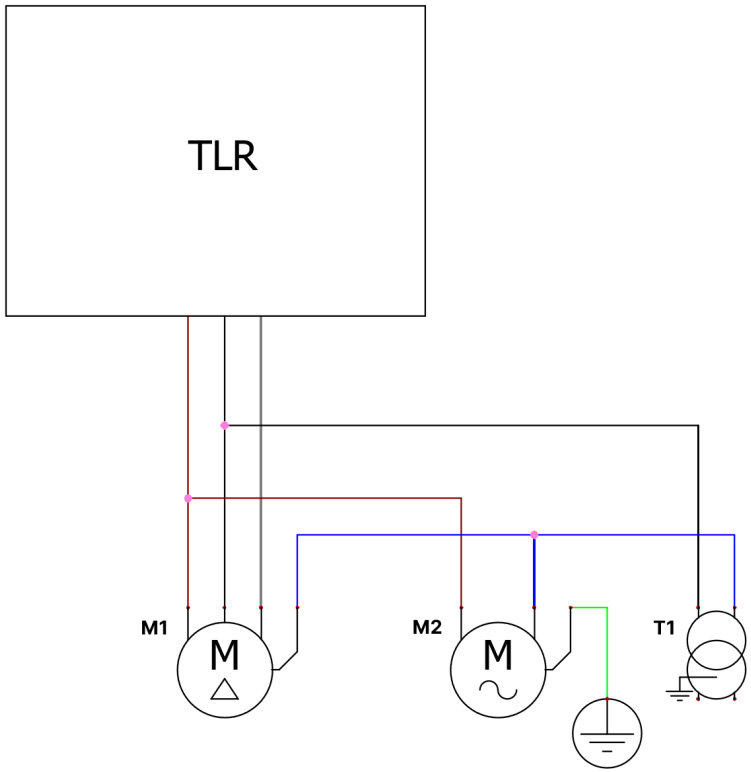

Bilingual EN / IT legends as per manufacturer's diagram · Drawings not to scale

G.Milani s.a.s. · Via Cavaglietto 25, 28010 Cavaglio d'Agogna (NO) · +39 0322 80 68 20 · info@gmilani.it · gmilani.cloud