BASIC SERIES

TLR 1

CONTROL UNIT FOR 230 VAC PRESSURE WASHERS

Essential TOTALSTOP for single-phase machines: one relay, one phase interrupted and built-in diesel delay.

Hot water | Cold water | 230 Vac | Made in Italy



POWER SUPPLY	PUMP 230 V	TOTALSTOP	DIMENSIONS
230 Vac	**3** kW · 4 HP	**8** s	**85×68×47** mm

TECHNICAL DATA

Power supply	230 Vac, 50/60 Hz
Pump motor	Up to 3 kW / 4 HP
Pump output	1 internal relay, one phase interrupted
Diesel solenoid valve	NO clean contacts, 3 s delayed activation
Inputs	Low-voltage pressure switches · separate electronics supply
TotalStop	8 s standard
Connections	6.3 mm Faston
Dimensions (L×W×H)	85 × 68 × 47 mm
Weight	440 g
Protection	Electronics encapsulated in epoxy resin

MAIN FUNCTIONS

- TOTALSTOP function, 8 s standard delay
- Delayed diesel solenoid valve activation (3 s)
- Separate supply input for complete shutdown

DESCRIPTION

TLR 1 controls 230 Vac pressure washers with a boiler. The **TOTALSTOP** function starts and stops the pump motor interrupting one phase, with a standard delay of 8 seconds.

The internal NO clean-contact relay drives the delayed activation (3 s) of the diesel solenoid valve.

PRESSURE WASHER ELECTRONICS

DESIGNED AND MADE IN ITALY

TLR 1 · Wiring diagram

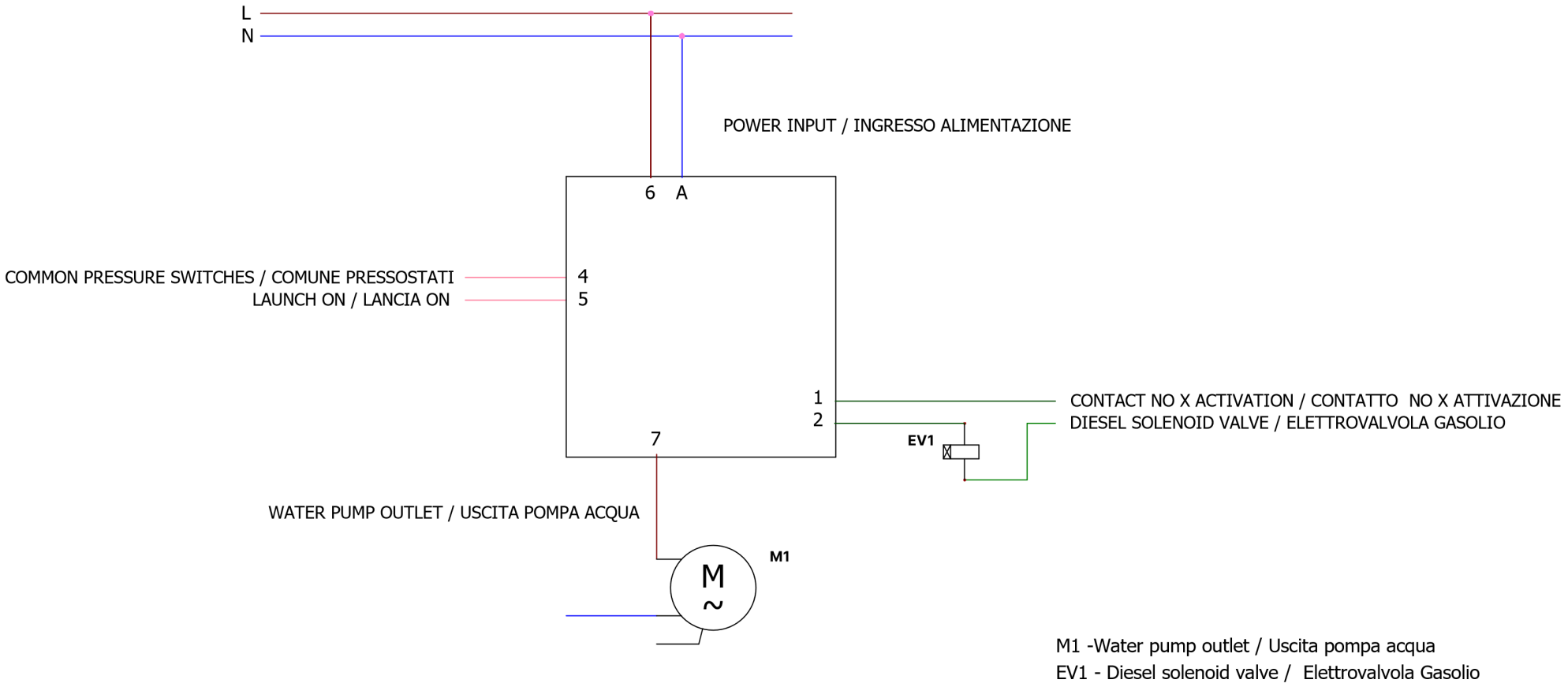

Bilingual EN / IT legends as per manufacturer's diagram · Drawings not to scale

G.Milani s.a.s. · Via Cavaglietto 25, 28010 Cavaglio d'Agogna (NO) · +39 0322 80 68 20 · info@gmilani.it · gmilani.cloud

TLR 1 · Dimensions, pressure switches and fan / spark connection

T1 - Spark high voltage transformer / Trasformatore alta tensione scintilla
M1 - Motor Pump / Motore Pompa
M2 - Smoke fan motor / Motore ventola fumi
P1 - Pressure switch generally mounted on the pump / Pressostato generalmente monatato su Pompa
P2 - Pressure switch generally mounted on Bypass Valve / Pressostato generalmente montato su Valvola Bypass

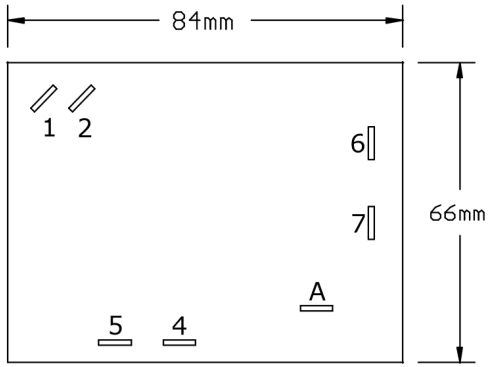

Example of pressure switch connection
Esempio collegamento pressostati

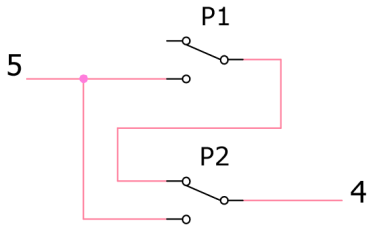

Example of Fan Motor and Spark Transformer connection
Esempio collegamento Motore Ventola e Trasformatore Scintilla

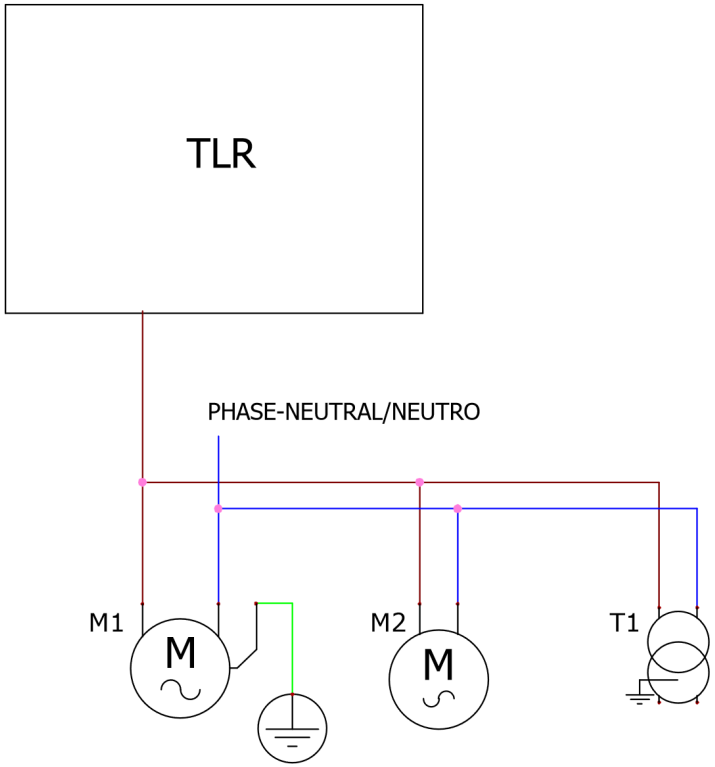

Bilingual EN / IT legends as per manufacturer's diagram · Drawings not to scale

G.Milani s.a.s. · Via Cavaglietto 25, 28010 Cavaglio d'Agogna (NO) · +39 0322 80 68 20 · info@gmilani.it · gmilani.cloud