ACCESSORIES SERIES

FTC

FLAME-PRESENCE CONTROL BOARD

Extra safety for the boiler: it cuts the diesel if the flame is missing or goes out, preventing clogging.

12 Vac · 24 Vac · 90–250 Vac · Made in Italy



POWER SUPPLY	OUTPUT	TRIP	DIMENSIONS
12 / 24 / 230 Vac	**6** A NO relay	**5** s without flame	**50×40×25** mm

TECHNICAL DATA

Versions	FTC12 — 12 Vac · FTC24 — 24 Vac · FTC230 — 90–250 Vac, 50/60 Hz
Output	6 A relay (230 Vac), NO clean contacts
Sensor	Standard 10 kΩ photoresistor (not supplied)
Indicator	12 Vdc (FTC12, FTC230) · 24 Vdc (FTC24)
Trip	Flame missing or lost for 5 continuous seconds
Connections	FS17 coloured 0.5 mm² cables, approx. 18 cm
Dimensions (L×W×H)	50 × 40 × 25 mm
Weight	80 g
Protection	Electronics encapsulated in epoxy resin

MAIN FUNCTIONS

- Wired in series with the diesel solenoid valve, like a switch
- Lockout and signalling if the photoresistor is shorted or open
- Steady light = normal operation · blinking = lockout
- Reset by removing power

DESCRIPTION

FTC is a safety board that checks flame presence in the boiler. A standard photoresistor (not supplied) installed in the boiler detects the flame.

At power-up the solenoid valve is enabled almost instantly and the light stays steady. If the flame is not detected or is lost for **5 continuous seconds**, FTC cuts power to the solenoid valve: no diesel enters and the boiler does not clog. The lockout persists as long as the board is powered.

Note: Choose the FTC version matching the supply voltage of the diesel solenoid valve used.

PRESSURE WASHER ELECTRONICS

DESIGNED AND MADE IN ITALY

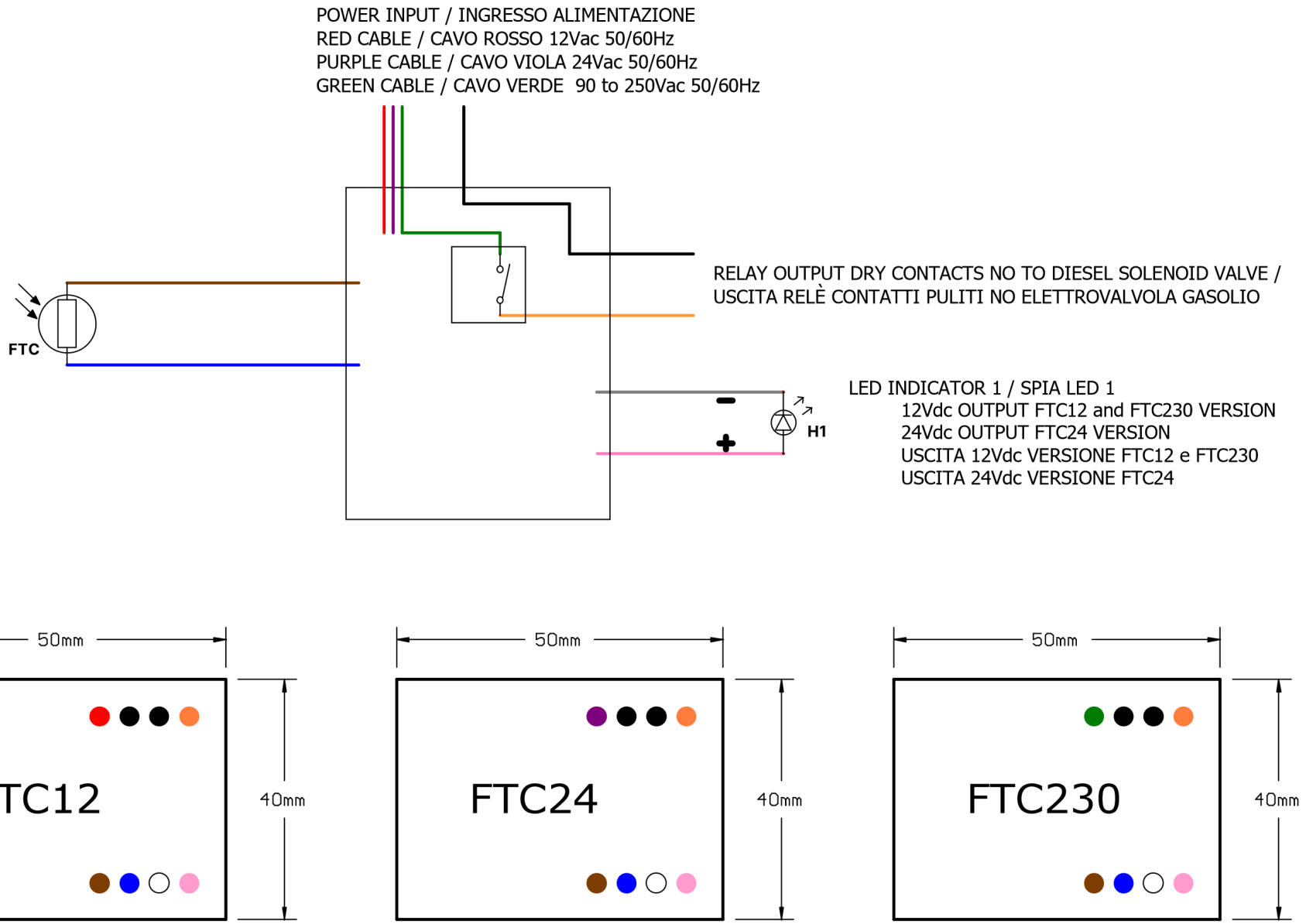

Bilingual EN / IT legends as per manufacturer's diagram · Drawings not to scale

G.Milani s.a.s. · FTC · Rev. 11/2026