PREMIUM SERIES

CMT PTZ

HI-FI STEPPED ATTENUATOR

27-position attenuator with 1% SMD film resistors and gold-plated internal brush, on a ball-bearing support.

27 positions · 1% resistors · Gold-plated brush · Made in Italy

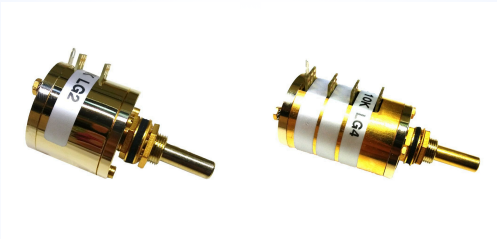

POSITIONS	DETENT ANGLE	VALUES	SECTIONS
27	12°	5 k – 1 MΩ	up to 4

ELECTRICAL AND MECHANICAL DATA

Rating	0.5 A @ 230 Vac · 1.5 A @ 30 Vdc
Insulation contacts / ground	2500 Vac for 1 min
Contact resistance	< 8 mΩ (max initial value)
Resistors	SMD film, 1% precision
Detent angle	12° per step · 27 positions
Detent torque	0.75 kg·cm
Shaft	Ø 6 mm
Body	Gold-treated brass, ball-bearing support
Contacts	Non-shorting (shorting on request), gold-plated, screw-fastened and replaceable

CONFIGURATIONS

CURVE	AVAILABLE VALUES (Ω)	SECTIONS
Linear / logarithmic	5k · 10k · 20k · 50k · 100k · 250k · 500k · 750k · 1M	up to 4

FEATURES AND VERSIONS

- Optional intermediate loudness tap (I)
- Sliding brush, silver then gold plated
- Sealed panel-mount design
- Individually tested

ROTARY SWITCHES

DESIGNED AND MADE IN ITALY

CMT PTZ · Dimensional drawing

DIMENSIONS IN MM

FRONT VIEW

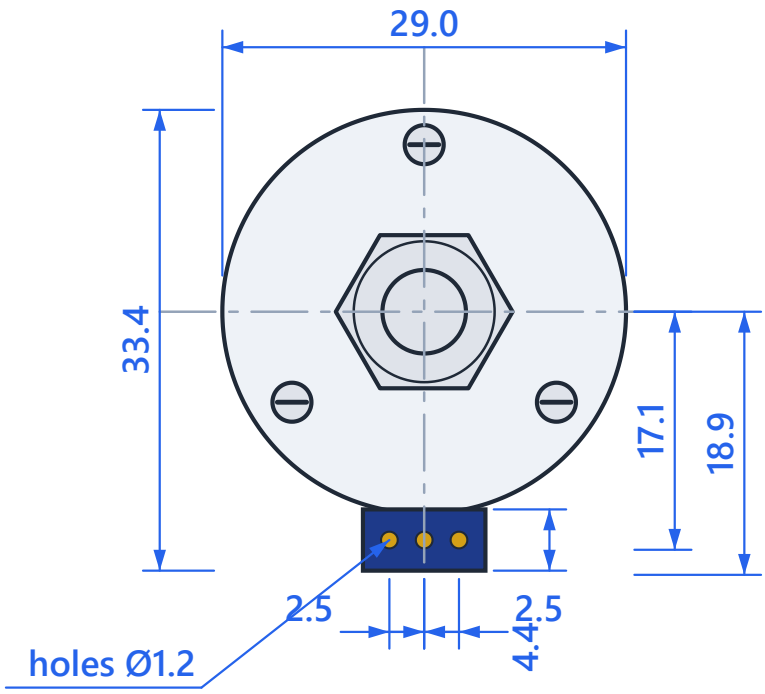

SIDE VIEW

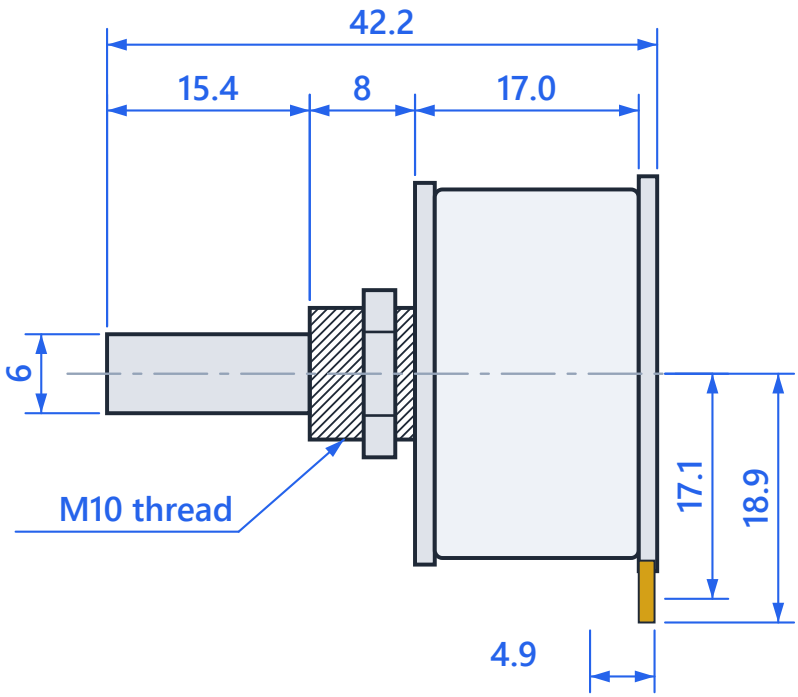

Metal parts · Body / decks · Terminals · Drawings not to scale · general tolerances as per manufacturer

Note: Add 8.3 mm to the length for each additional section.