PREMIUM SERIES

CMT PRO

HIGH-END HI-FI ROTARY SWITCH

Handcrafted from premium materials and individually tested: light yet firm detent with zero play, gold-plated screw-fastened replaceable contacts.

Gold-plated contacts · Adjustable end-stop · Double O-ring · Made in Italy

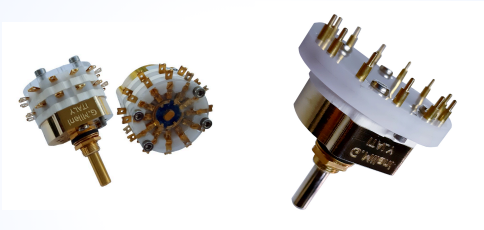

DETENT ANGLE	POSITIONS	RATING	CONTACT RESISTANCE
30°	up to 12	0.5 A · 230 Vac	< 8 mΩ

ELECTRICAL AND MECHANICAL DATA

Rating (resistive load)	0.5 A @ 230 Vac · 1.5 A @ 30 Vdc
Insulation contacts / ground	2500 Vac for 1 min
Initial contact resistance	< 8 mΩ (max)
Detent angle	30°
Detent torque	0.75 kg·cm
Shaft	Ø 6 mm ± 0.01, gold-protected brass
Contacts	Phosphor bronze, silver then gold plated, tweezer type, non-shorting (shorting on request)
Contact carrier	Natural Delrin® acetal resin
Screws	Brass and nickel-plated steel

CONFIGURATIONS

DECKS	POSITIONS	ADDITIONAL LENGTH
1–4 ways	up to 12	+ 8.3 mm per deck

FEATURES AND VERSIONS

- Contacts fastened with screw and nut: clamping effect, replaceable
- End-stop braking adjustable by moving a screw
- Sealed with double O-ring on the shaft
- Gold-protected brass shaft, support and flywheel
- Also available with PCB terminals

ROTARY SWITCHES

DESIGNED AND MADE IN ITALY

CMT PRO · Dimensional drawing

DIMENSIONS IN MM

SIDE VIEW

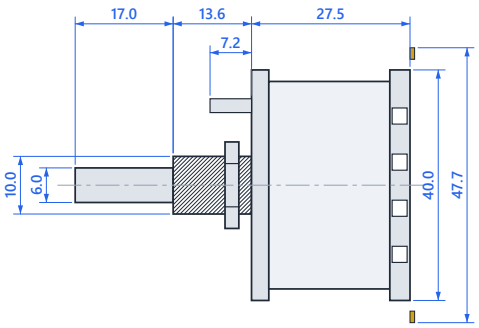

FRONT VIEW

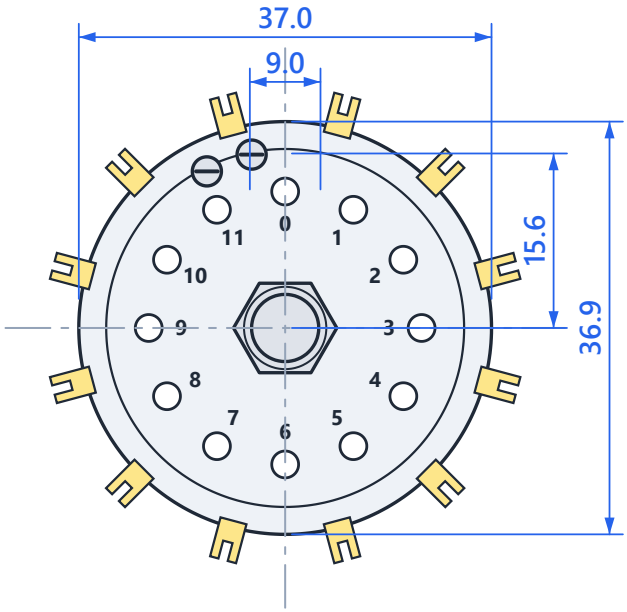

PCB VERSION

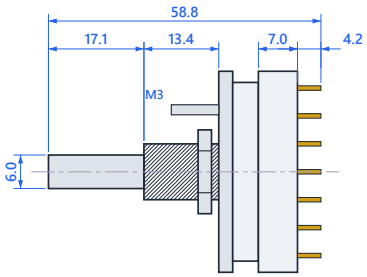

RECOMMENDED PCB DRILLING (Ø1.7)

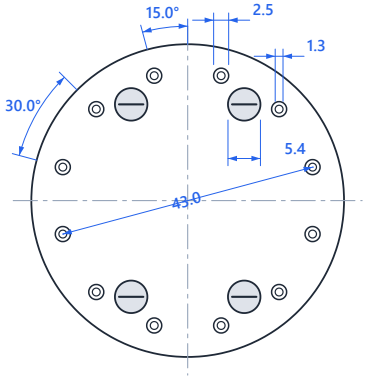

CONNECTIONS, SOLDER SIDE VIEW

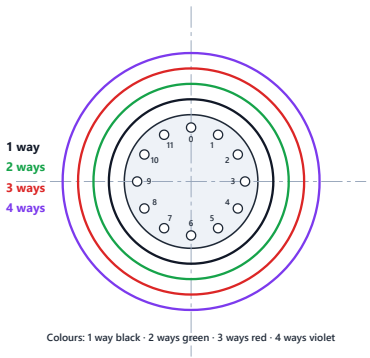

Metal parts · Body / decks · Terminals · Drawings not to scale · general tolerances as per manufacturer

Note: Add 8.3 mm to the length for each additional deck.