STANDARD SERIES

8VCS

SIGNAL SWITCH FOR PCB MOUNTING

Moulded decks with in-line terminals at 2.54 mm pitch for direct PCB mounting.

Up to 12 positions | Up to 4 decks | 2.54 mm pitch | Made in Italy



POSITIONS	DETENT ANGLE	TERMINAL PITCH	WIDTH
up to 12	30°	2.54 mm	38 mm

ELECTRICAL AND MECHANICAL DATA

Rating (resistive load)	0.2 A @ 220 Vac · 0.4 A @ 30 Vdc
Initial contact resistance	< 9 mΩ (+ track resistance)
Insulation contacts / ground	1300 Vac · 150×10^9 Ω
Insulation between poles	900 Vac · 20×10^9 Ω
Mechanical life	> 100,000 operations (with load = 10% of rated value)
Detent torque	1.2 kg·cm (soft) · 1.7 kg·cm (medium)
Length L	23 mm (1 section) + 7.62 mm per section

CONFIGURATIONS

POLES	POSITIONS
1	12
2	6
3	4

Maximum 4 sections. Non-shorting (shorting on request). 60° or 90° detents on request.

FEATURES AND VERSIONS

- Sliding-shoe contacts
- Movable stop
- HV version: insulated polyester-glass shaft (up to 2 decks), nylon mounting screws (1 deck)
- Sealed version: shaft O-ring, internal seal in the threaded bushing, nitrile rubber washer for panel mounting

ROTARY SWITCHES

DESIGNED AND MADE IN ITALY

8VCS · Dimensional drawing

DIMENSIONS IN MM

FRONT VIEW

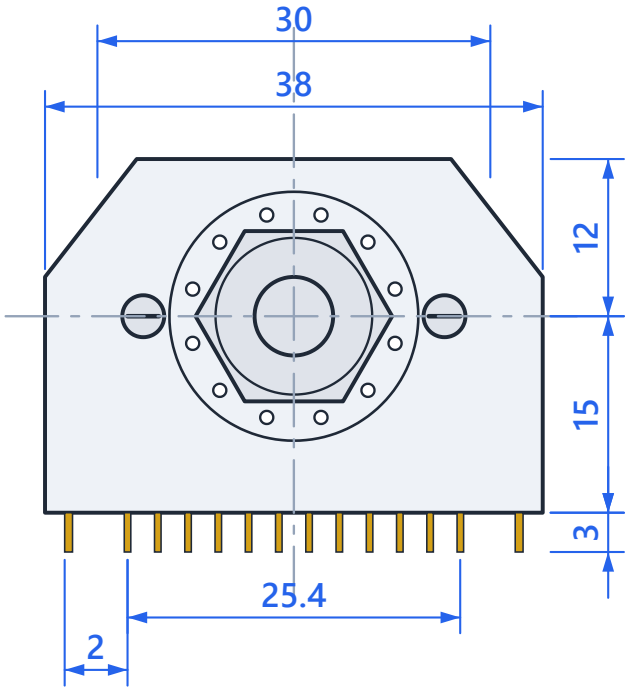

SIDE VIEW

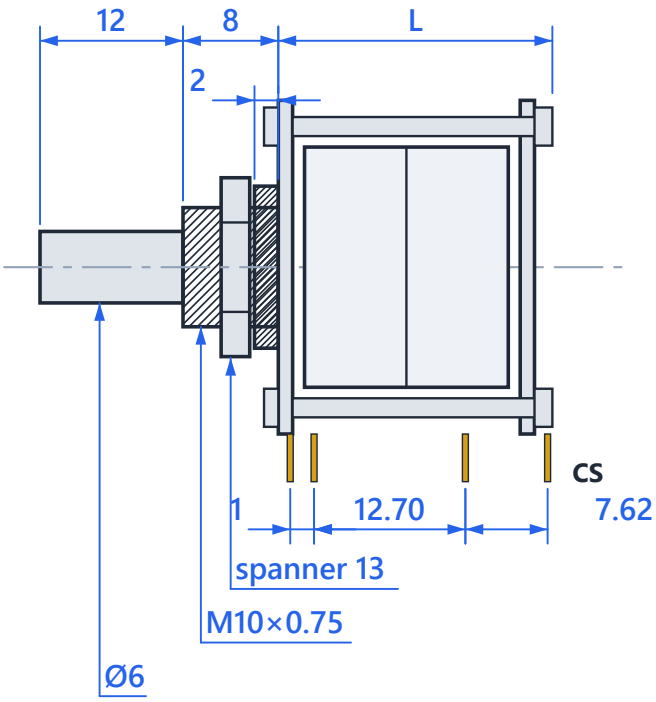

Metal parts · Body / decks · Terminals · Drawings not to scale · general tolerances as per manufacturer

Note: L = 23 mm for 1 section; add 7.62 mm for each additional section.

8VCS · Terminal layout

VIEWED FROM THE SIDE OPPOSITE THE KNOB

Blue brackets mark the pins to be bridged on the customer's PCB. V = common (way) · • = unconnected pin.

8VCS · NON-SHORTING/BBM

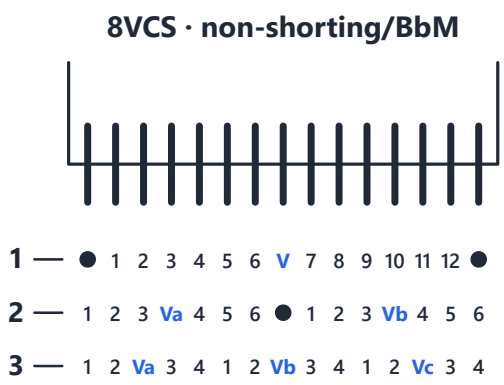

8VCS · SHORTING/BBM

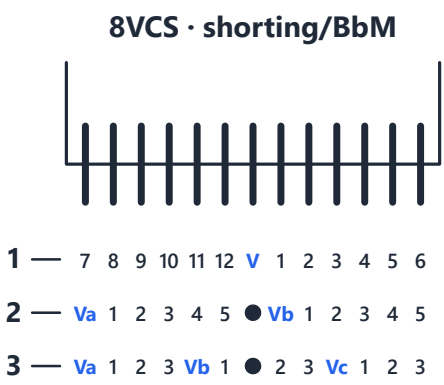

9VCS · 6 WAYS · NON-SHORTING/BBM

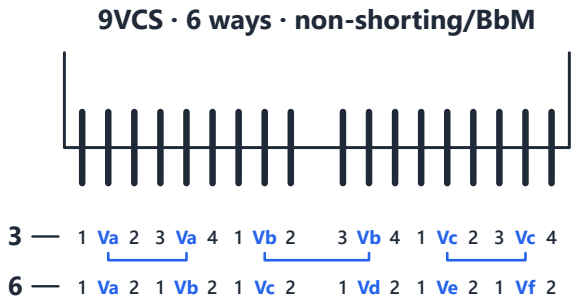

9VCS · 4 WAYS · NON-SHORTING/BBM

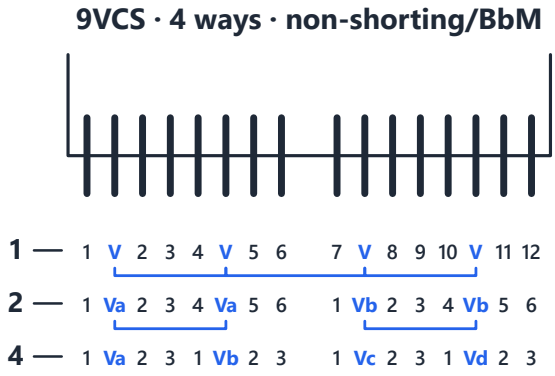

5VCS · NON-SHORTING/BBM

