STANDARD SERIES

8V

SIGNAL SWITCH WITH SOLDER-LUG TERMINALS

Moulded decks and non-shorting sliding-shoe contacts, with internal movable stop and up to 4 decks.

Up to 12 positions | Up to 4 decks | Solder-lug terminals | Made in Italy



POSITIONS	DETENT ANGLE	DIAMETER	MECHANICAL LIFE
up to 12	30°	30 mm	> 100,000 ops

ELECTRICAL AND MECHANICAL DATA

Rating (resistive load)	0.2 A @ 110 Vac · 1.4 A @ 30 Vdc
Initial contact resistance	< 9 mΩ (+ track resistance)
Insulation contacts / ground	1300 Vac · 150×10^9 Ω
Insulation between poles	900 Vac · 20×10^9 Ω
Mechanical life	> 100,000 operations (with load = 10% of rated value)
Detent torque	1.2–1.7 kg·cm (other values on request)
Length L	23 mm (1 section) + 7.62 mm per section

CONFIGURATIONS

POLES PER SECTION	POSITIONS PER SECTION
1	12
2	6
3	4

Maximum 4 sections. 60° or 90° detents on request.

FEATURES AND VERSIONS

- Non-shorting sliding-shoe contacts
- Movable stop
- HV version: insulated polyester-glass shaft (up to 2 decks), nylon mounting screws (1 deck)
- Sealed version: shaft O-ring, internal seal in the threaded bushing, nitrile rubber washer for panel mounting

ROTARY SWITCHES

DESIGNED AND MADE IN ITALY

8V · Dimensional drawing

DIMENSIONS IN MM

FRONT VIEW

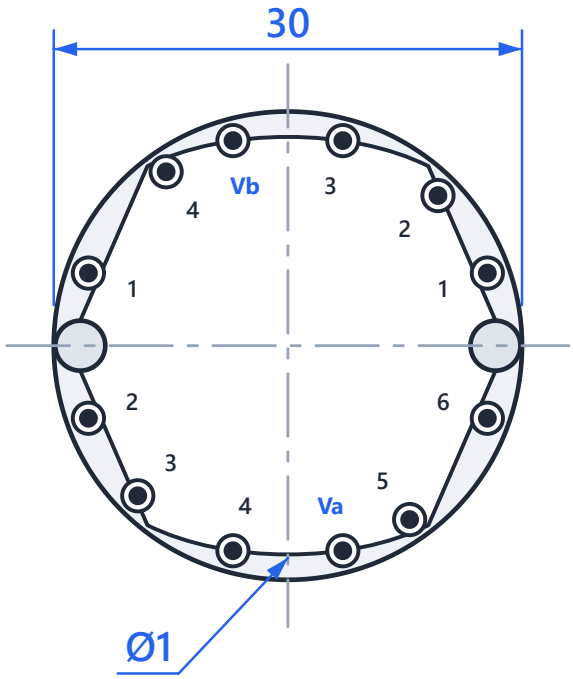

SIDE VIEW

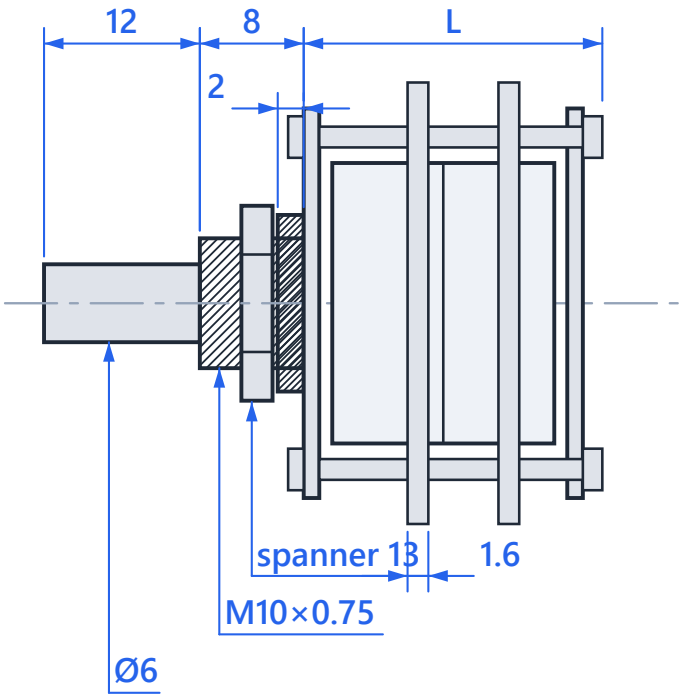

Metal parts · Body / decks · Terminals · Drawings not to scale · general tolerances as per manufacturer

Note: L = 23 mm for 1 section; add 7.62 mm for each additional section.