STANDARD SERIES

7VCS14

KEY-OPERATED SWITCH FOR PCB MOUNTING

Key-operated signal switch, protected against electrostatic discharge, with key removable in every position.

Up to 4 positions | 90° detent | ESD protection | Made in Italy



POSITIONS	DETENT ANGLE	ESD (AIR)	FOOTPRINT
2 · 3 · 4	90°	8 kV	19 × 19 mm

ELECTRICAL AND MECHANICAL DATA

Rating (resistive load)	0.2 A @ 220 Vac · 0.8 A @ 30 Vdc
Initial contact resistance	< 9 mΩ
Insulation between contacts	1200 Vac · 30×10^9 Ω
Mechanical life	> 100,000 operations (with load = 10% of rated value)
Detent torque	0.4–0.6 kg·cm
ESD protection	EN 61000-4-2 · key/contacts 8000 V air, 4000 V contact
PCB hole	Ø 1.1 mm

CONFIGURATIONS

POLES	POSITIONS
1	2
1	3
1	4 (continuous rotation)

Non-shorting contacts, key removable in every position.

FEATURES AND VERSIONS

- Elastic brush contacts
- Fixed stop
- Key removable in every position

ROTARY SWITCHES

DESIGNED AND MADE IN ITALY

7VCS14 · Dimensional drawing

DIMENSIONS IN MM

SIDE VIEW

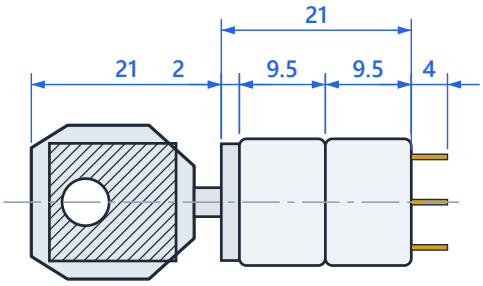

FRONT VIEW

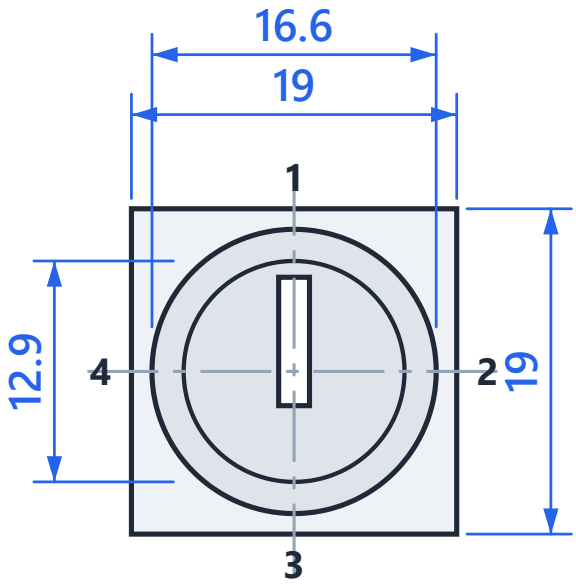

REAR VIEW

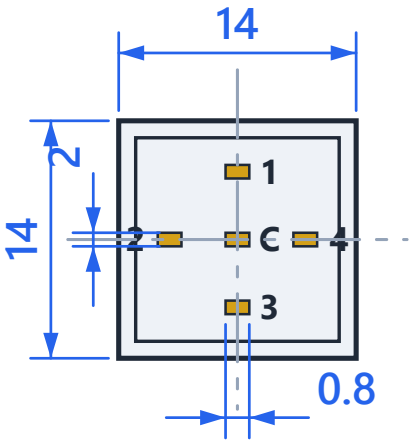

Metal parts · Body / decks · Terminals · Drawings not to scale · general tolerances as per manufacturer