STANDARD SERIES

6VCS NCC

24-POSITION SWITCH FOR PCB MOUNTING

FR-4 decks with gold-protected tracks and non-shorting contacts: completes the 2VCS series with 24 positions at 15°.

Up to 24 positions | Up to 4 decks | For PCB mounting | Made in Italy

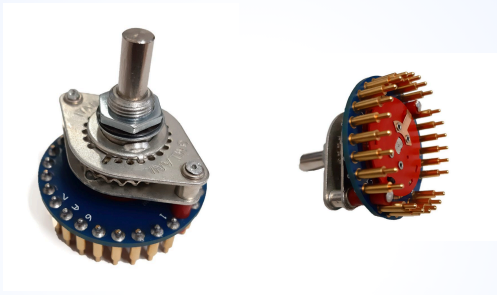

POSITIONS	DETENT ANGLE	HEIGHT	RECOMMENDED HOLE
up to 24	15°	27.4 mm	Ø 1.7 mm

ELECTRICAL AND MECHANICAL DATA

Rating (resistive load)	0.2 A @ 230 Vac · 0.4 A @ 30 Vdc
Initial contact resistance	< 14 mΩ (+ track resistance)
Insulation to ground	1300 Vac · 20×10^9 Ω
Mechanical life	> 120,000 operations (with load = 10% of rated value)
Detent torque	1.5 or 2.0 kg·cm (other values on request)
Height	27.4 mm + 8.5 mm per section

CONFIGURATIONS

POLES PER SECTION	POSITIONS PER SECTION
1 (6VCS124)	24
2 (6VCS212)	12

Maximum 4 sections (standard sections added after the last one). 30°, 60°, 90° detents on request.

FEATURES AND VERSIONS

- Non-shorting sliding-shoe contacts
- Movable stop
- HV version: insulated polyester-glass shaft (up to 4 decks), nylon mounting screws (1 deck)
- Sealed version: shaft O-ring, internal seal in the threaded bushing, nitrile rubber washer for panel mounting

ROTARY SWITCHES

DESIGNED AND MADE IN ITALY

6VCS NCC · Dimensional drawing

DIMENSIONS IN MM

FRONT VIEW

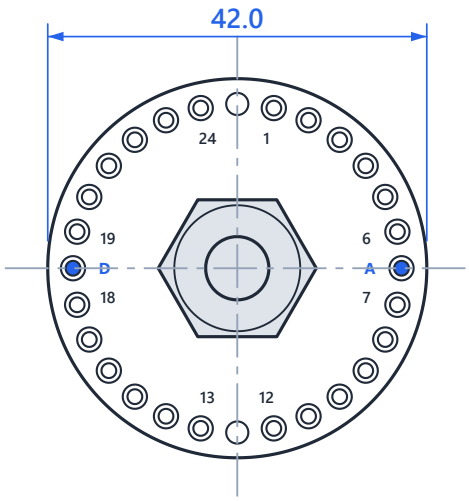

SIDE VIEW

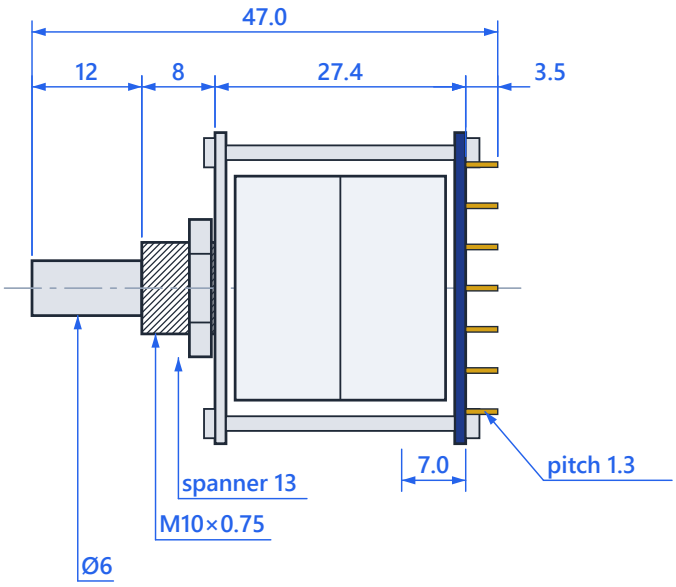

6VCS124 DRILLING

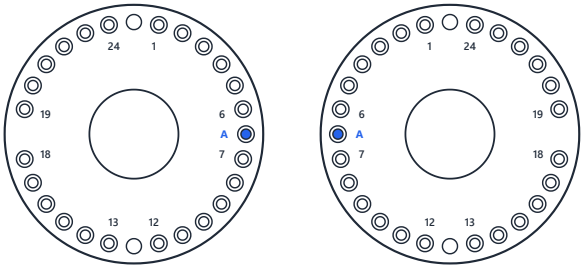

CS · component side

SS · solder side

6VCS212 DRILLING

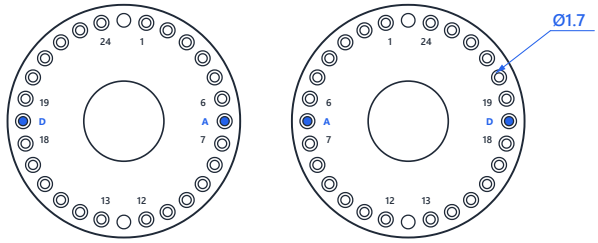

CS · way 1 in A, way 2 in D

SS · solder side

Metal parts · Body / decks · Terminals · Drawings not to scale · general tolerances as per manufacturer

Note: Recommended PCB hole Ø 1.7 mm. CS = component side, SS = solder side.