STANDARD SERIES

6VCS CC

24-POSITION SHORTING SWITCH FOR PCB MOUNTING

FR-4 decks with gold-plated tracks and shorting contact on every position: designed for professional audio.

24 positions at 15° | Gold-plated FR-4 decks | HV and sealed versions | Made in Italy

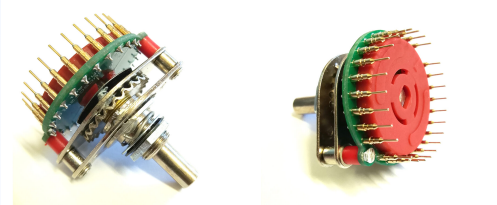

POSITIONS	DETENT ANGLE	CONTACTS	HEIGHT
24	15°	Shorting	27.4 mm

ELECTRICAL AND MECHANICAL DATA

Rating (resistive load)	200 mA @ 250 Vac · 400 mA @ 30 Vdc
Contact resistance	< 12 mΩ (+ track resistance)
Insulation to ground	1300 Vac · 20×10^9 Ω
Mechanical life	> 120,000 operations (load = 0.1 × maximum rating)
Detent torque	1.5 or 2 kg·cm (custom values available)
Height	27.4 mm + 8.5 mm per deck
Terminals	New gold-plated terminal, footprint differs from standard 6VCS

CONFIGURATIONS

POLES PER DECK	POSITIONS PER DECK
1	24
2	12

Maximum 4 decks (standard decks added at the end with terminals).

FEATURES AND VERSIONS

- Sliding-brush contacts, shorting only
- Movable end-stop
- Dedicated DXF footprint available
- HV version: insulated polyester-glass shaft (up to 4 decks), nylon mounting screws (1 deck)
- Sealed version: shaft O-ring, internal seal in the threaded bushing, nitrile rubber washer for panel mounting

ROTARY SWITCHES

DESIGNED AND MADE IN ITALY

TERMINAL SIDE VIEW

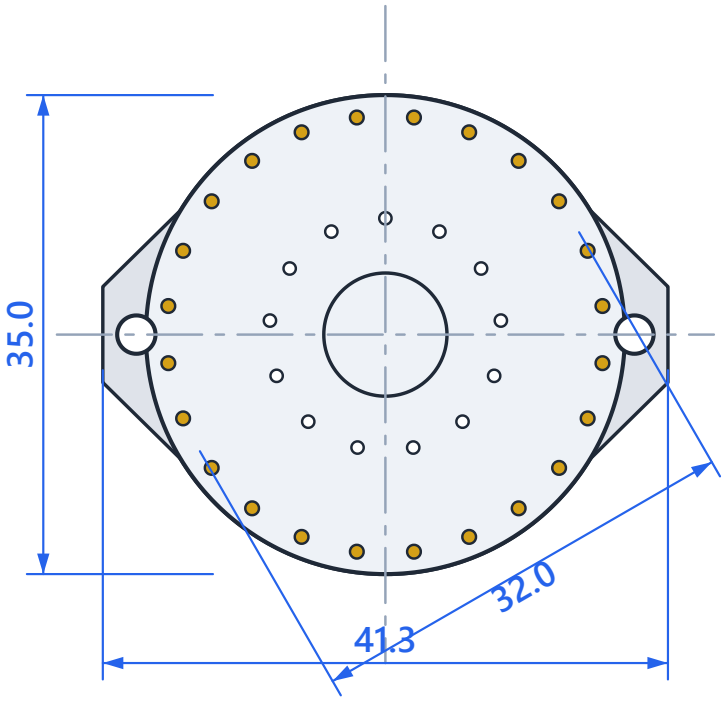

SIDE VIEW

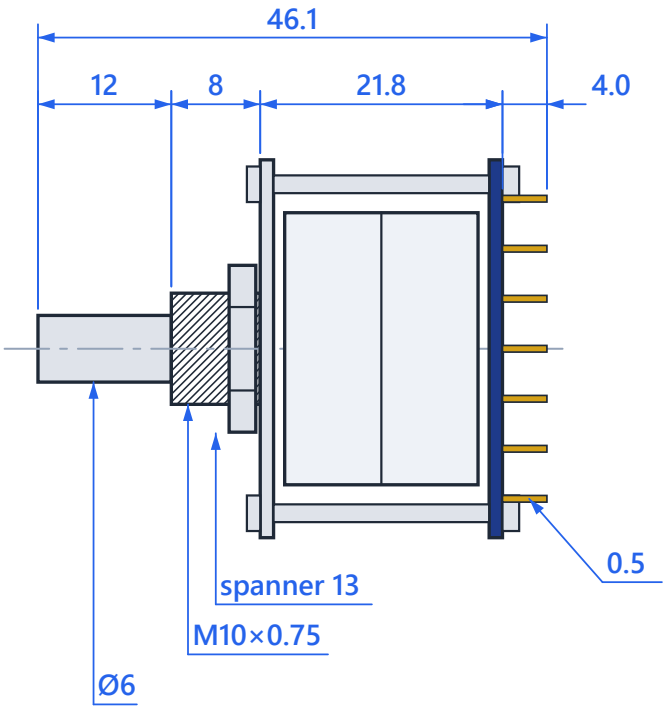

Metal parts · Body / decks · Terminals · Drawings not to scale · general tolerances as per manufacturer