STANDARD SERIES

6V

24-POSITION NON-SHORTING SWITCH

Completes the 2V series: moulded decks, non-shorting sliding-shoe contacts and 24 positions at 15°.

Up to 24 positions | Up to 4 decks | Non-shorting | Made in Italy



POSITIONS	DETENT ANGLE	DIAMETER	MECHANICAL LIFE
up to 24	15°	42 mm	> 120,000 ops

ELECTRICAL AND MECHANICAL DATA

Rating (resistive load)	0.2 A @ 230 Vac · 0.4 A @ 30 Vdc
Initial contact resistance	< 14 mΩ (+ track resistance)
Insulation	1300 Vac · 20×10^9 Ω
Mechanical life	> 120,000 operations (with load = 10% of rated value)
Detent torque	1.5–2.0 kg·cm (other values on request)
Height	23 mm + 7.5 mm per section

CONFIGURATIONS

POLES PER SECTION	POSITIONS PER SECTION
1	24
2	12

Maximum 4 sections. 30°, 60°, 90° detents on request. PCB version: 6VCS.

FEATURES AND VERSIONS

- Sliding-shoe contacts
- Movable stop
- HV version: insulated polyester-glass shaft (up to 4 decks), nylon mounting screws (1 deck)
- Sealed version: shaft O-ring, internal seal in the threaded bushing, nitrile rubber washer for panel mounting

ROTARY SWITCHES

DESIGNED AND MADE IN ITALY

6V · Dimensional drawing

DIMENSIONS IN MM

FRONT VIEW

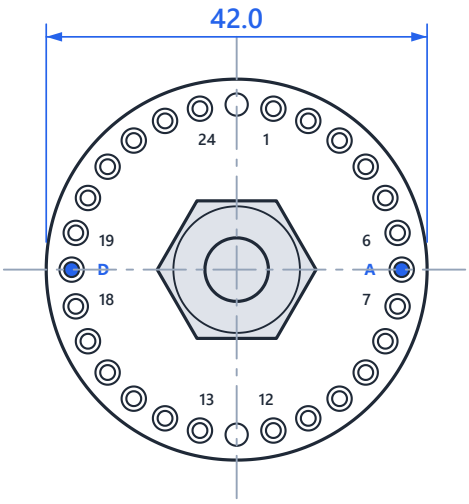

SIDE VIEW

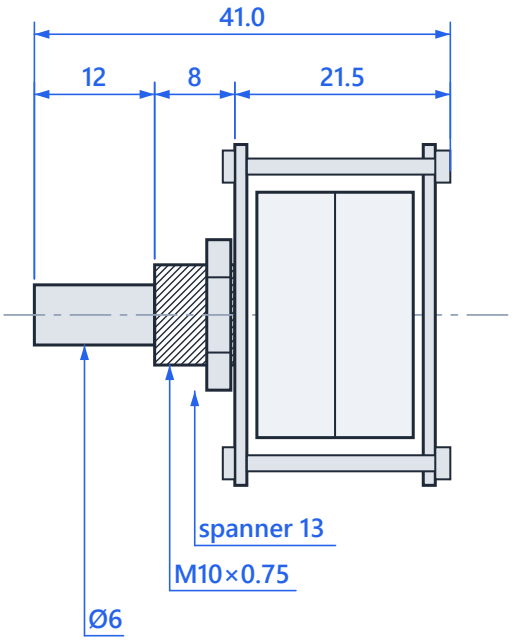

6VCS124 DRILLING (COMPONENT SIDE)

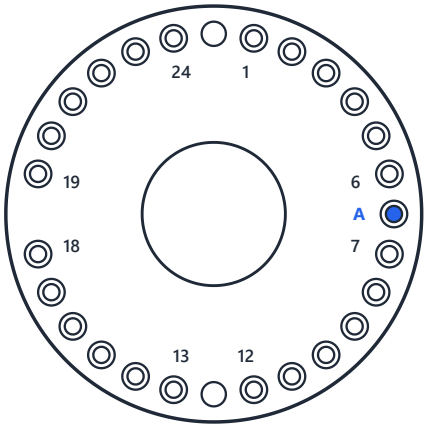

CS · 1 way in A

6VCS212 DRILLING (COMPONENT SIDE)

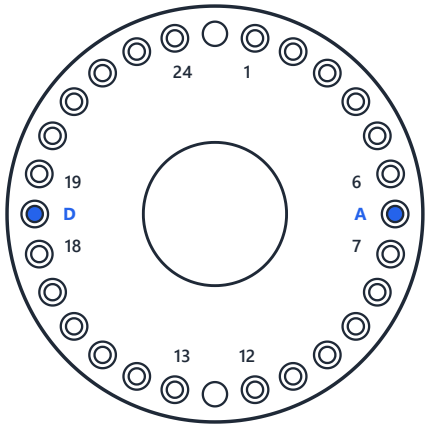

CS · way 1 in A, way 2 in D

Metal parts · Body / decks · Terminals · Drawings not to scale · general tolerances as per manufacturer