STANDARD SERIES

4VCS

HI-FI SWITCH FOR PCB MOUNTING

High-end series for electronics and HI-FI, handcrafted and tested: precise detent with zero play, terminals locked by screw and nut.

Up to 11 positions | Up to 3 poles | HI-FI | Made in Italy

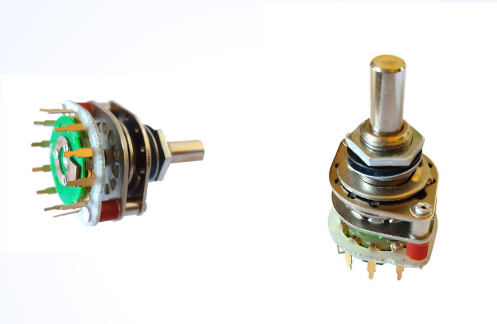

POSITIONS	DETENT ANGLE	RATING	TERMINALS
up to 11	30°	0.9 A · 220 Vac	12 on Ø 23.5

ELECTRICAL AND MECHANICAL DATA

Rating (resistive load)	0.9 A @ 220 Vac · 4 A @ 30 Vdc
Initial contact resistance	< 9 mΩ
Insulation	1300 Vac · 150×10^9 Ω
Mechanical life	> 200,000 operations (with load = 10% of rated value)
Standard height	19 mm (customizable, minimum 17 mm)

CONFIGURATIONS

POLES	POSITIONS	POLES IN
1	11	A
2	5	A, C
3	3	A, B, D

FEATURES AND VERSIONS

- Terminals fastened with screw and nut: clamping effect, replaceable
- Adjustable end-stop
- Protective discs for transport and storage
- Mixed sections connectable to the PCB with rigid wires
- HV version: insulated polyester-glass shaft (up to 2 decks), nylon mounting screws (1 deck)
- Sealed version: shaft O-ring, internal seal in the threaded bushing, nitrile rubber washer for panel mounting

ROTARY SWITCHES

DESIGNED AND MADE IN ITALY

4VCS · Dimensional drawing

DIMENSIONS IN MM

SOLDER SIDE VIEW

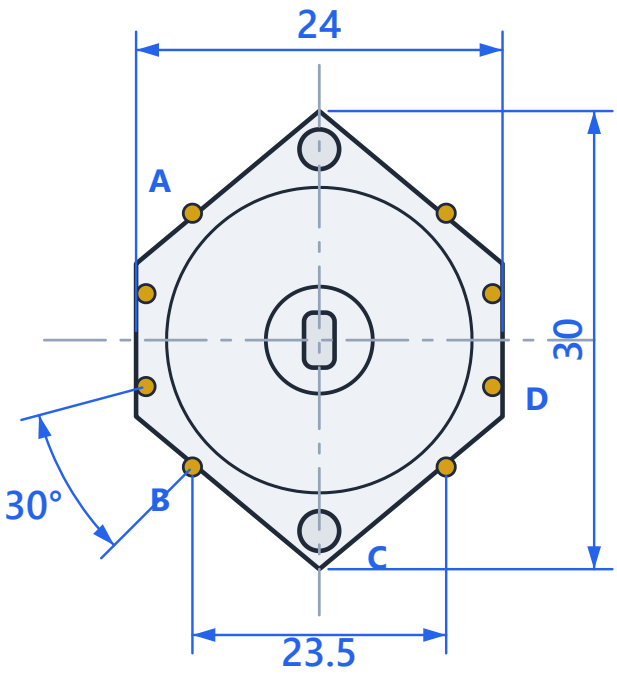

SIDE VIEW

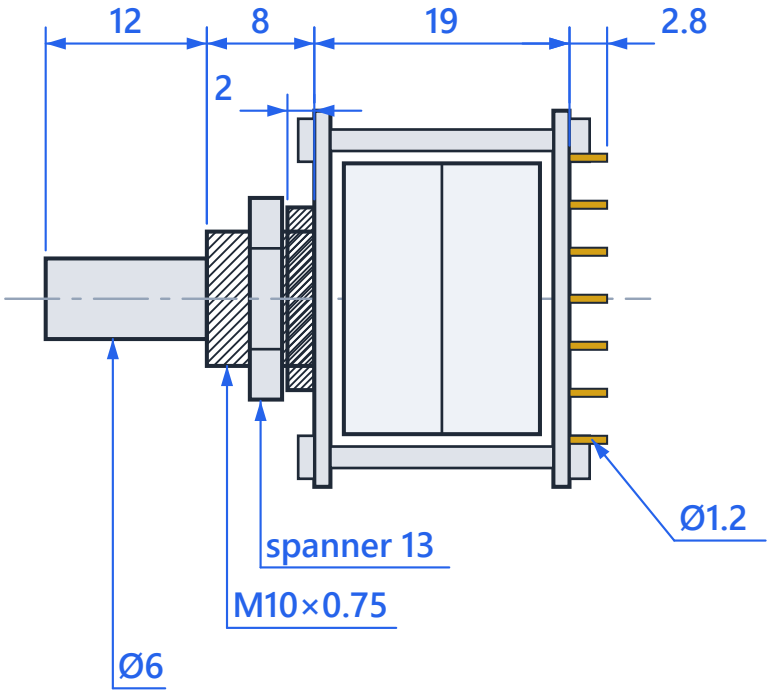

Metal parts · Body / decks · Terminals · Drawings not to scale · general tolerances as per manufacturer