STANDARD SERIES

4V

COMPACT SWITCH WITH SOLDER-LUG TERMINALS

Small footprint for signal and low-power applications, sliding-shoe contacts and up to 4 decks.

Up to 12 positions | Up to 4 decks | Solder-lug terminals | Made in Italy



POSITIONS	DETENT ANGLE	RATING	FOOTPRINT
up to 12	30°	0.9 A · 220 Vac	28 × 30 mm

ELECTRICAL AND MECHANICAL DATA

Rating (resistive load)	0.9 A @ 220 Vac · 4 A @ 30 Vdc
Initial contact resistance	< 9 mΩ
Insulation	1300 Vac · 150×10^9 Ω
Mechanical life	> 200,000 operations (with load = 10% of rated value)
Detent torque	1.2–1.7 kg·cm (other values on request)
Height	23 mm + 7.5 mm per section

CONFIGURATIONS

POLES PER SECTION	POSITIONS PER SECTION
1	12
2	6
3	4

Maximum 4 sections. All contacts are shorting. 60° or 90° detents on request.

FEATURES AND VERSIONS

- Sliding-shoe contacts
- Movable stop
- HV version: insulated polyester-glass shaft (up to 2 decks), nylon mounting screws (1 deck)
- Sealed version: shaft O-ring, internal seal in the threaded bushing, nitrile rubber washer for panel mounting

ROTARY SWITCHES

DESIGNED AND MADE IN ITALY

4V · Dimensional drawing

DIMENSIONS IN MM

FRONT VIEW

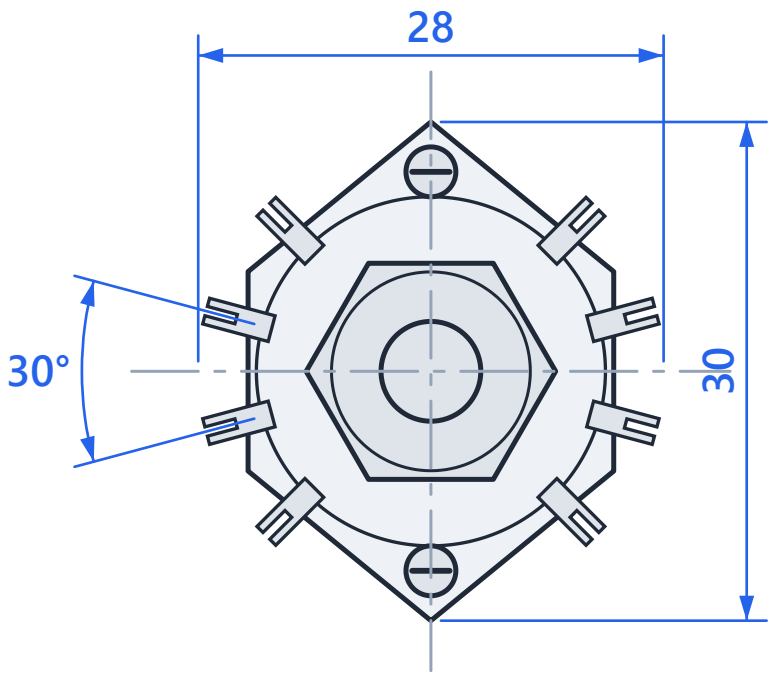

SIDE VIEW

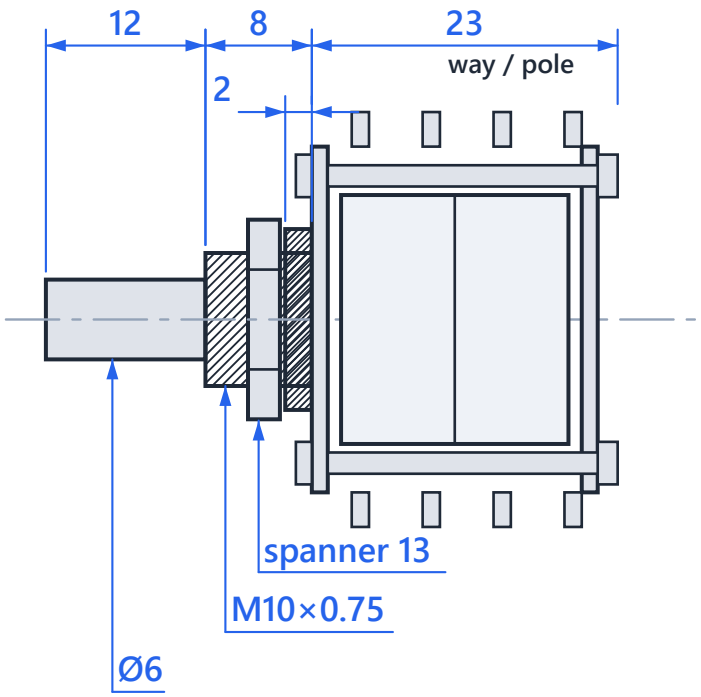

Metal parts · Body / decks · Terminals · Drawings not to scale · general tolerances as per manufacturer