BASIC SERIES

3R

SWITCH FOR PCB MOUNTING

From 1×12 to 2×2 positions with 30° to 90° detents: a versatile solution for cost-effective and professional applications.

Up to 12 positions | Up to 2 poles | For PCB mounting | Made in Italy



POSITIONS	DETENT ANGLE	RATING	DIAMETER
up to 12	30–90°	1.5 A · 230 Vac	27 mm

ELECTRICAL AND MECHANICAL DATA

Rating (resistive load)	1.5 A @ 230 Vac · 3 A @ 30 Vdc
Initial contact resistance	< 9 mΩ
Insulation between poles	1200 Vac · 40×10^9 Ω
Mechanical life	> 30,000 operations (with load = 10% of rated value)
Detent torque	0.8–1.2 kg·cm · soft 0.5–0.7 kg·cm
Terminal holes	Ø 1.1 mm

CONFIGURATIONS

MODEL	POLES	POSITIONS	DETENT
3R112	1	12	30°
3R206	2	6	30°
3R108	1	8	45°
3R204	2	4	45°
3R106	1	6	60°
3R203	2	3	60°
3R104	1	4	90°
3R202	2	2	90°

Non-shorting; shorting only for 30° detent with suffix S (e.g. 3R112S).

FEATURES AND VERSIONS

- Balanced roller contact: stable detent feel
- Adjustable internal stop, active positions defined at order
- Optional metal ring: axial strength from 20 to over 40 kg
- Protective contact cap
- Sealed version: shaft O-ring, internal seal in the threaded bushing, nitrile rubber washer for panel mounting

ROTARY SWITCHES

DESIGNED AND MADE IN ITALY

3R · Dimensional drawing

DIMENSIONS IN MM

FRONT VIEW

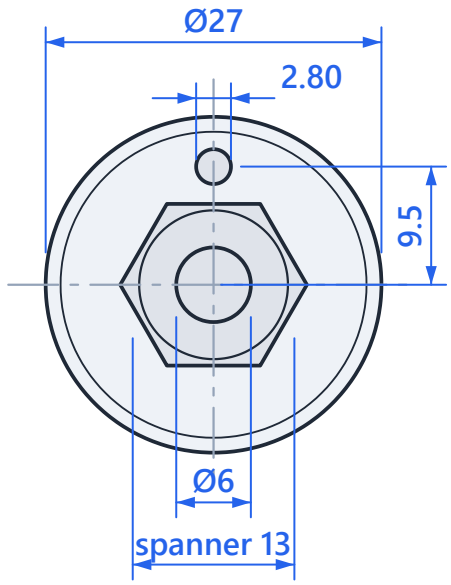

SIDE VIEW

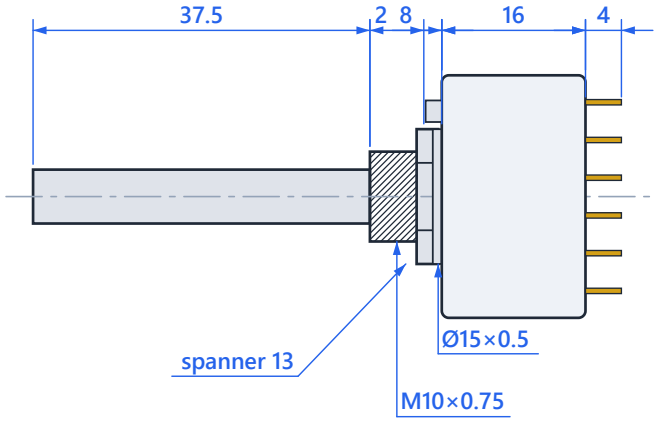

3R112-30 · 1 WAY 30°

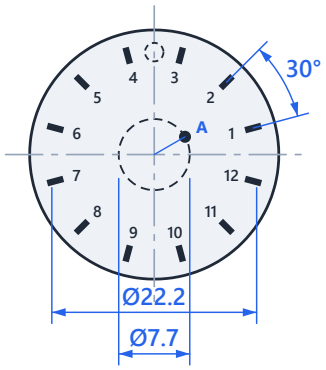

3R106-60 · 1 WAY 60°

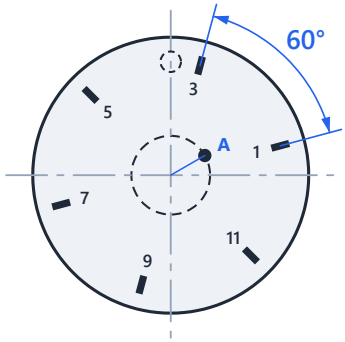

3R104-90 · 1 WAY 90°

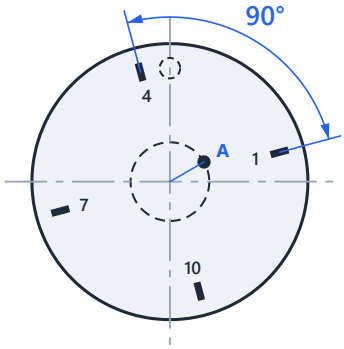

3R206-30 · 2 WAYS 30°

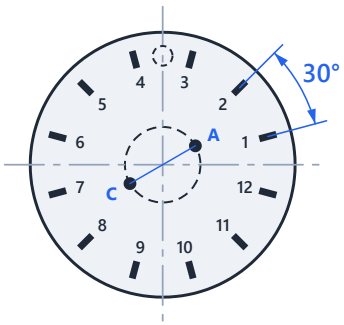

3R203-60 · 2 WAYS 60°

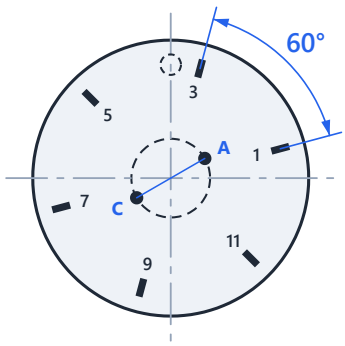

3R202-90 · 2 WAYS 90°

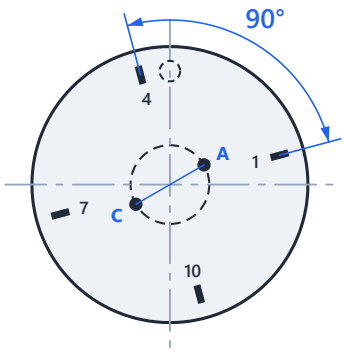

Metal parts Body / decks Terminals Drawings not to scale · general tolerances as per manufacturer