STANDARD SERIES

2VCS

24-TERMINAL SWITCH FOR PCB MOUNTING

Single section with poles integrated into the 24 terminals on Ø 32.5 mm: compact, sturdy, PCB-ready.

Up to 23 positions | Up to 4 poles | For PCB mounting | Made in Italy

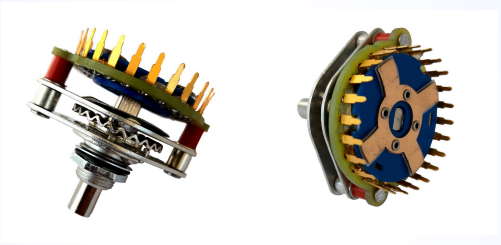

POSITIONS	DETENT ANGLE	RATING	TERMINALS
up to 23	15°	0.9 A · 230 Vac	24 on Ø 32.5

ELECTRICAL AND MECHANICAL DATA

Rating (resistive load)	0.9 A @ 230 Vac · 4 A @ 30 Vdc
Initial contact resistance	< 9 mΩ
Insulation	1400 Vac · 200×10^9 Ω (additional value: 1300 Vac · 100×10^9 Ω)
Mechanical life	> 200,000 operations (with load = 10% of rated value)
Detent torque	1.5 or 2.0 kg·cm (other values on request)
Height	21 mm (customizable, minimum 17 mm)

CONFIGURATIONS

POLES	POSITIONS	POLES IN
1	23	A
2	11	A, D
3	7	A, C, E
4	5	A, B, D, F

Shorting contacts in the 15° version; for the non-shorting version see the 6VCS series. 30°, 60°, 90° detents on request.

FEATURES AND VERSIONS

- Poles included in the 24 terminals on Ø 32.5 mm (see drawing)
- Mixed sections connectable to the PCB with rigid wires
- Movable stop
- HV version: insulated polyester-glass shaft (up to 4 decks), nylon mounting screws (1 deck)
- Sealed version: shaft O-ring, internal seal in the threaded bushing, nitrile rubber washer for panel mounting

ROTARY SWITCHES

DESIGNED AND MADE IN ITALY

2VCS · Dimensional drawing

DIMENSIONS IN MM

FRONT VIEW (TERMINAL SIDE)

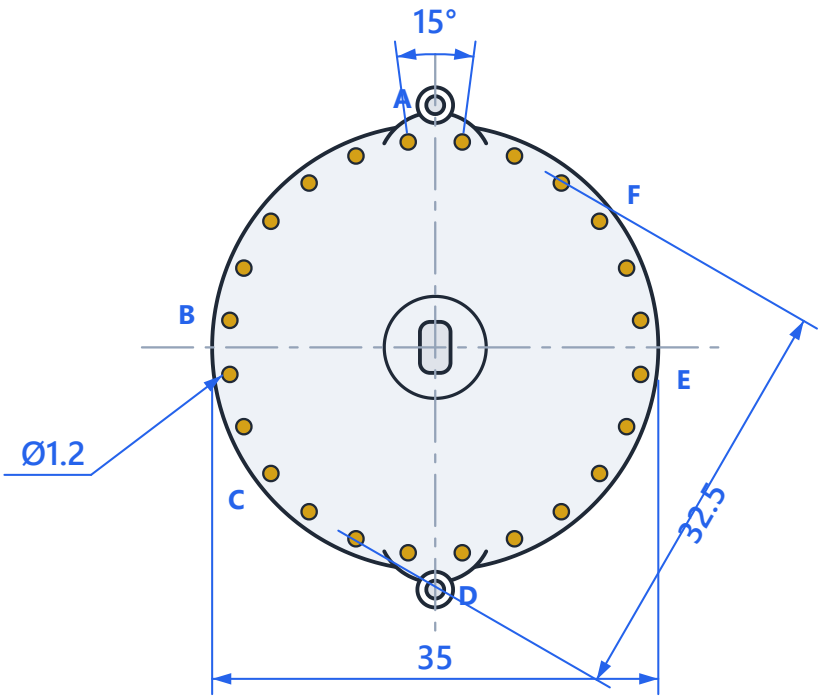

SIDE VIEW

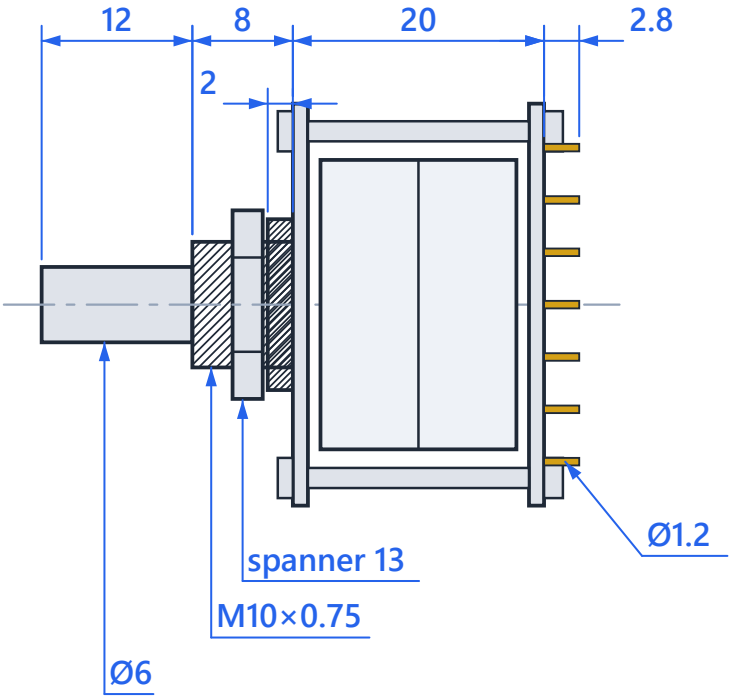

Metal parts · Body / decks · Terminals · Drawings not to scale · general tolerances as per manufacturer