STANDARD SERIES

2V

24-POSITION SWITCH WITH SOLDER-LUG TERMINALS

Low-resistance sliding-shoe contacts, 15° detent and up to 24 positions per section: the reference for fine selection.

Up to 24 positions | Up to 4 poles | Solder-lug terminals | Made in Italy

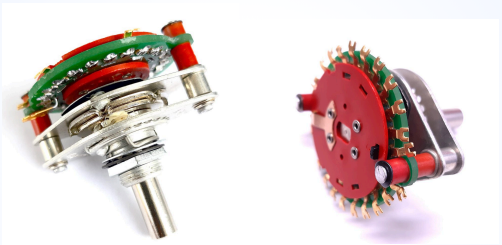

POSITIONS	DETENT ANGLE	RATING	MECHANICAL LIFE
up to 24	15°	0.9 A · 220 Vac	> 200,000 ops

ELECTRICAL AND MECHANICAL DATA

Rating (resistive load)	0.9 A @ 220 Vac · 4 A @ 30 Vdc
Initial contact resistance	< 9 mΩ
Insulation	1400 Vac · 200×10^9 Ω
Mechanical life	> 200,000 operations (with load = 10% of rated value)
Detent torque	1.5 or 2.0 kg·cm (other values on request)
Contacts	Sliding shoe, shorting
Length	21 mm + 8.5 mm per section

CONFIGURATIONS

POLES PER SECTION	POSITIONS PER SECTION
1	24
2	12
3	8
4	6

Maximum 4 sections. All contacts are shorting; for the non-shorting version see the 6V series. 30°, 60°, 90° detents on request.

FEATURES AND VERSIONS

- Movable stop
- HV version: insulated polyester-glass shaft (up to 4 decks), nylon mounting screws (1 deck)
- Sealed version: shaft O-ring, internal seal in the threaded bushing, nitrile rubber washer for panel mounting

ROTARY SWITCHES

DESIGNED AND MADE IN ITALY

2V · Dimensional drawing

DIMENSIONS IN MM

FRONT VIEW

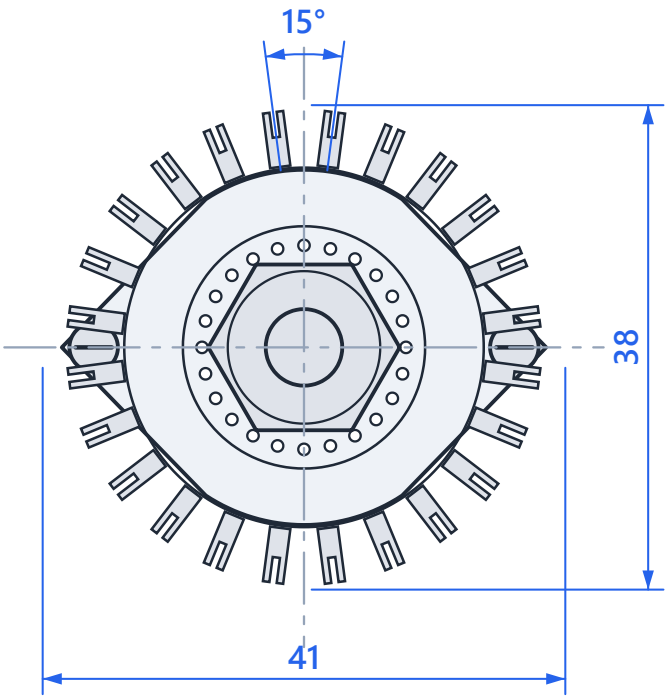

SIDE VIEW

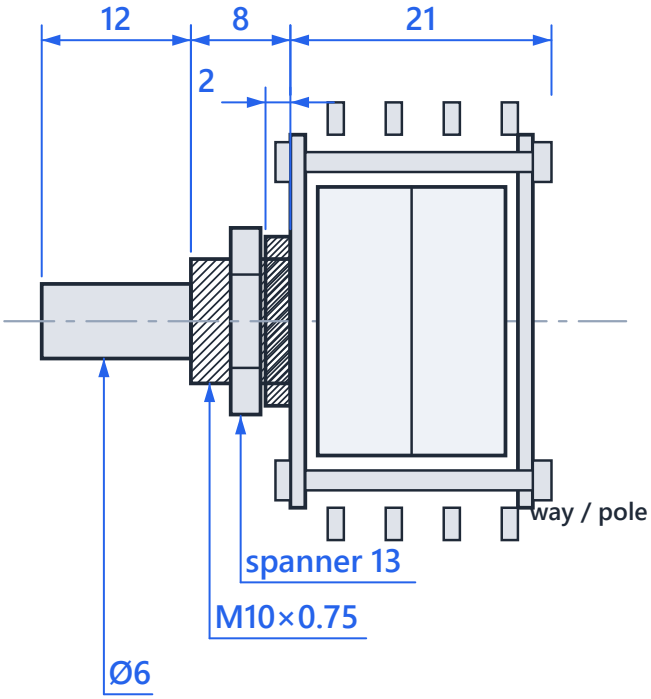

Metal parts · Body / decks · Terminals · Drawings not to scale · general tolerances as per manufacturer