STANDARD SERIES

1VCS

SIGNAL SWITCH FOR PCB MOUNTING

1V performance with turned terminals: so sturdy it can be held on the PCB by the shaft alone, without panel screws.

Up to 11 positions | Up to 4 poles | For PCB mounting | Made in Italy



POSITIONS	DETENT ANGLE	CONTACT RESISTANCE	HEIGHT
up to 11	30°	< 5 mΩ	19 mm

ELECTRICAL AND MECHANICAL DATA

Rating (resistive load)	0.3 A @ 220 Vac · 1.3 A @ 30 Vdc
Initial contact resistance	< 5 mΩ
Insulation	1300 Vac · 100×10^9 Ω
Mechanical life	> 300,000 operations (with load = 10% of rated value)
Detent torque	1.0–1.5 kg·cm (other values on request)
Insulating support	FR4 deck
Terminals	Turned, Ø 1.2 mm
Standard height	19 mm (customizable, minimum 17 mm)

CONFIGURATIONS

POLES PER SECTION	POSITIONS PER SECTION
1	11
2	5
3	3
4	2

Maximum 4 sections. Non-shorting contacts; shorting on request.

FEATURES AND VERSIONS

- Fixing eyelets of the last section replaced by turned terminals
- Mixed sections: wiring sections connected to the FR4 deck with rigid wires
- Movable stop
- HV version: insulated polyester-glass shaft (up to 4 decks), nylon mounting screws (1 deck)
- Sealed version: shaft O-ring, internal seal in the threaded bushing, nitrile rubber washer for panel mounting

ROTARY SWITCHES

DESIGNED AND MADE IN ITALY

1VCS · Dimensional drawing

DIMENSIONS IN MM

FRONT VIEW

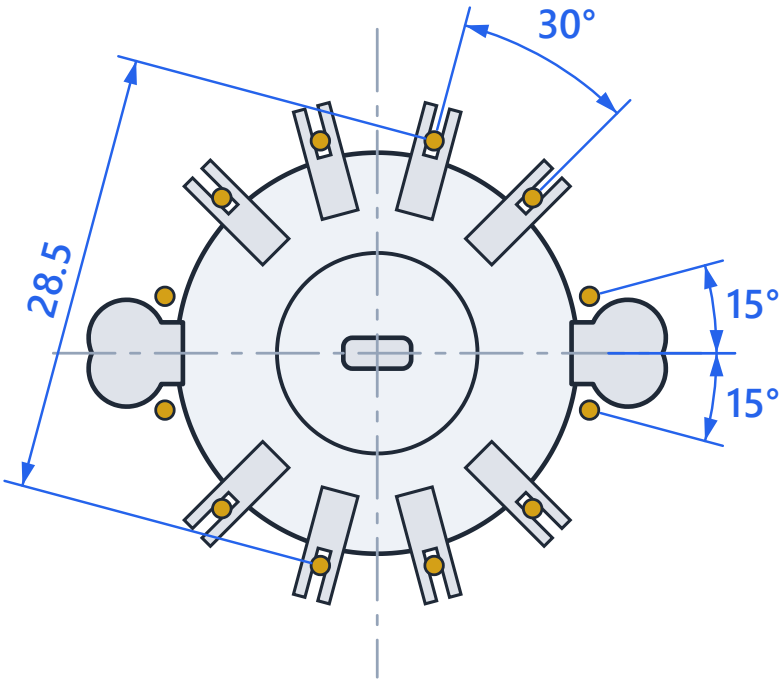

SIDE VIEW

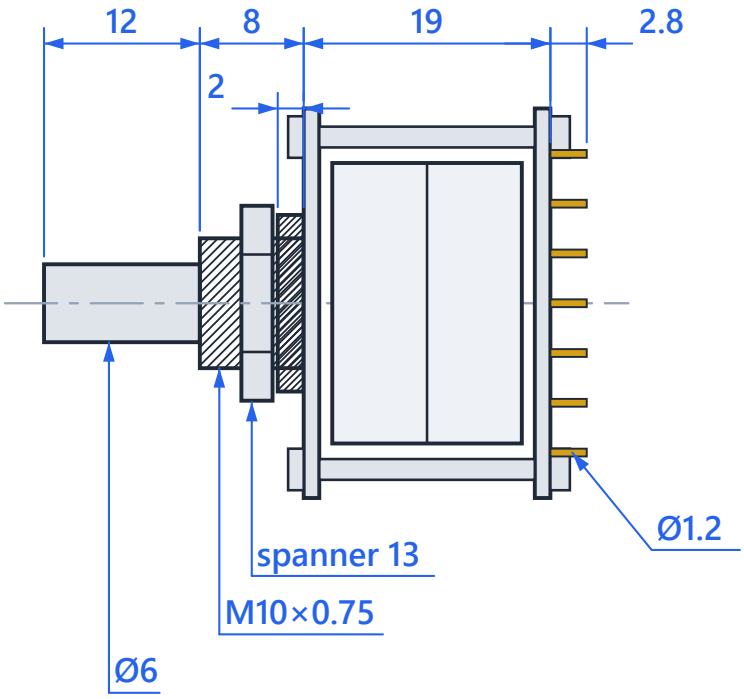

Metal parts · Body / decks · Terminals · Drawings not to scale · general tolerances as per manufacturer