STANDARD SERIES

1V

SIGNAL SWITCH WITH SOLDER-LUG TERMINALS

Very low contact resistance with elastic tweezer contacts and modular construction up to 4 sections.

Up to 11 positions | Up to 4 poles | Solder-lug terminals | Made in Italy

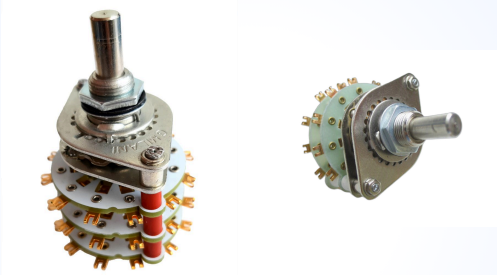

POSITIONS	DETENT ANGLE	CONTACT RESISTANCE	MECHANICAL LIFE
up to 11	30°	< 5 mΩ	> 300,000 ops

ELECTRICAL AND MECHANICAL DATA

Rating (resistive load)	0.3 A @ 220 Vac · 1.3 A @ 30 Vdc
Initial contact resistance	< 5 mΩ
Insulation (1-pole type)	1300 Vac · 100×10^9 Ω
Mechanical life	> 300,000 operations (with load = 10% of rated value)
Detent torque	1.0–1.5 kg·cm (other values on request)
Contacts	Elastic tweezer type
Terminal holes	0.9 × 1.8 mm
Length L	21 mm (1 pole, 1 section) + 8.5 mm per section

CONFIGURATIONS

POLES PER SECTION	POSITIONS PER SECTION
1	11
2	5
3	3
4	2

Maximum 4 sections. Non-shorting contacts; shorting on request.

FEATURES AND VERSIONS

- Movable stop
- Protective contact cap
- HV version: insulated polyester-glass shaft (up to 4 decks), nylon mounting screws (1 deck)
- Sealed version: shaft O-ring, internal seal in the threaded bushing, nitrile rubber washer for panel mounting

ROTARY SWITCHES

DESIGNED AND MADE IN ITALY

1V · Dimensional drawing

DIMENSIONS IN MM

FRONT VIEW

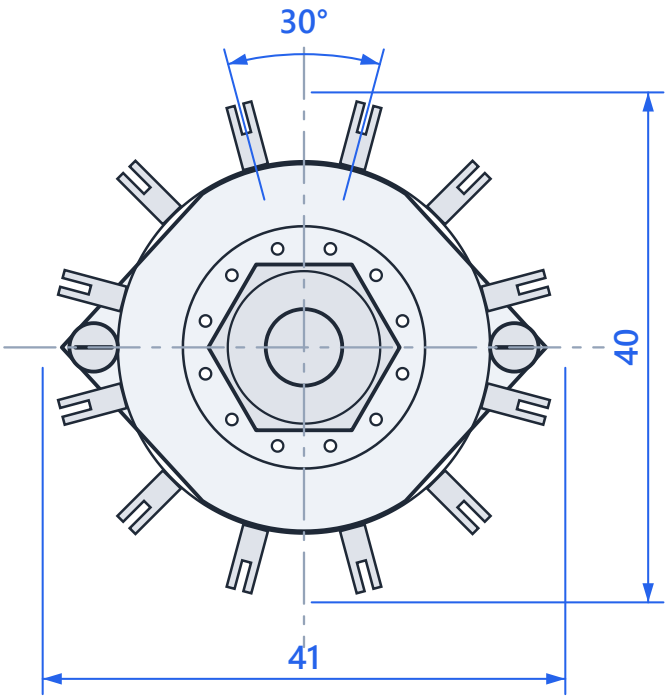

SIDE VIEW

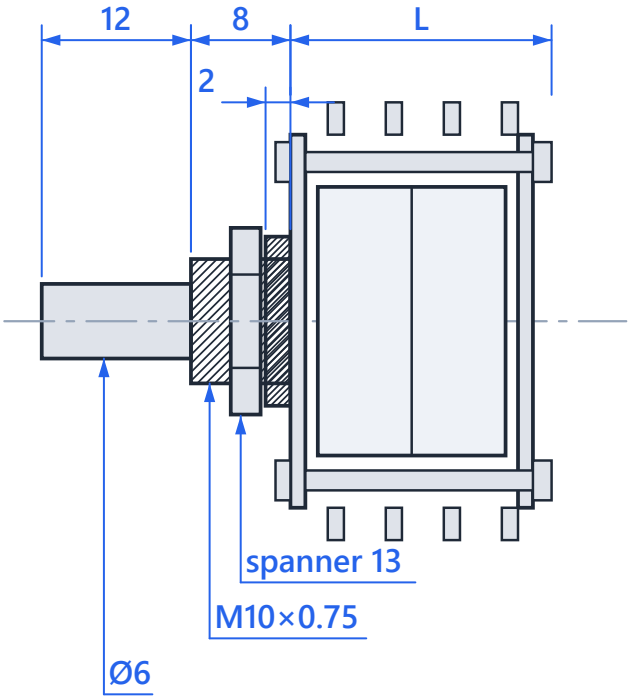

Metal parts · Body / decks · Terminals · Drawings not to scale · general tolerances as per manufacturer

Note: L = 21 mm for 1 section; add 8.5 mm for each additional section.