BASIC SERIES

13R

SWITCH FOR SMALL DOMESTIC APPLIANCES

Balanced roller contact, 30° to 90° detents and optional supply fully wired with cable and connector.

Up to 12 positions | Up to 2 poles | Available pre-wired | Made in Italy



POSITIONS	DETENT ANGLE	RATING	DIAMETER
up to 12	30–90°	1.5 A · 220 Vac	27.8 mm

ELECTRICAL AND MECHANICAL DATA

Rating (resistive load)	1.5 A @ 220 Vac · 3 A @ 30 Vdc
Initial contact resistance	< 9 mΩ
Insulation between poles	1200 Vac · 40×10^9 Ω
Mechanical life	> 30,000 operations (with load = 10% of rated value)
Detent torque	0.8–1.2 kg·cm · soft 0.5–0.7 kg·cm
Terminal holes	0.9 × 1.8 mm

CONFIGURATIONS

MODEL	POLES	POSITIONS	DETENT
13R112	1	12	30°
13R206	2	6	30°
13R108	1	8	45°
13R204	2	4	45°
13R106	1	6	60°
13R203	2	3	60°
13R104	1	4	90°
13R202	2	2	90°

Non-shorting contacts.

FEATURES AND VERSIONS

- Internal stop, active positions defined at order
- Protective contact cap
- Wired version: cable, colours, length, sleeving and connectors to customer drawing
- Sealed version: shaft O-ring, internal seal in the threaded bushing, nitrile rubber washer for panel mounting

ROTARY SWITCHES

DESIGNED AND MADE IN ITALY

13R · Dimensional drawing

DIMENSIONS IN MM

SIDE VIEW

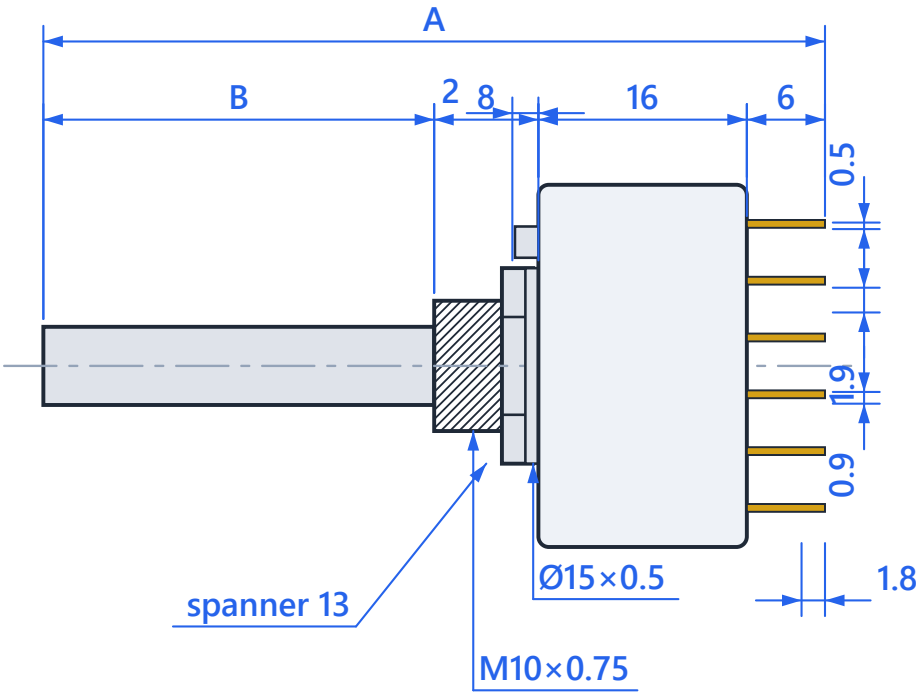

FRONT VIEW

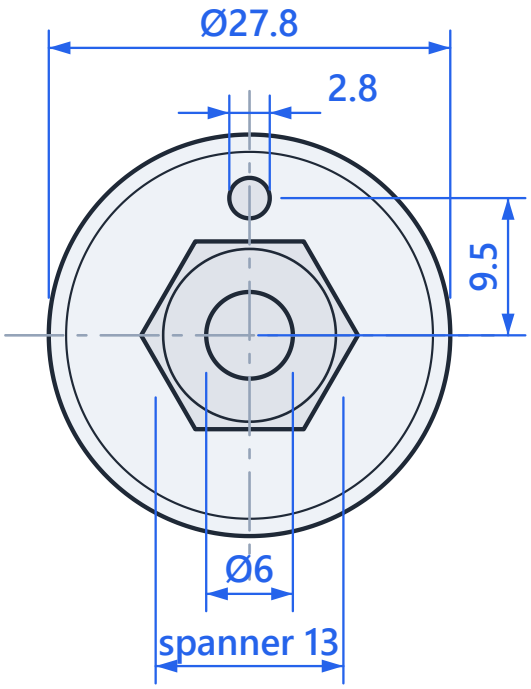

Metal parts · Body / decks · Terminals · Drawings not to scale · general tolerances as per manufacturer

Note: Dimensions A (overall length) and B (shaft length) according to the required version.