BASIC SERIES

11R

SIGNAL SWITCH WITH SOLDER-LUG TERMINALS

The solder version of the 10R series: 1 to 4 poles, 30° detent, gold-plated contacts.

Up to 12 positions | Up to 4 poles | Solder-lug terminals | Made in Italy



POSITIONS	DETENT ANGLE	CONTACT RESISTANCE	DIAMETER
up to 12	30°	< 10 mΩ	27 mm

ELECTRICAL AND MECHANICAL DATA

Rating (resistive load)	200 mA @ 250 Vac · 400 mA @ 30 Vdc
Initial contact resistance	< 10 mΩ
Insulation adjacent contacts	1300 Vac · 22×10^9 Ω
Insulation between poles	1200 Vac · 20×10^9 Ω
Operating temperature	–20 … +80 °C
Mechanical life	> 120,000 operations (with load = 10% of rated value)
Detent torque	1.0–1.2 kg·cm · soft 0.6–0.8 kg·cm

CONFIGURATIONS

MODEL	POLES	POSITIONS
11R112	1	12
11R206	2	6
11R304	3	4
11R403	4	3

Non-shorting; shorting with suffix S (e.g. 11R112S).

FEATURES AND VERSIONS

- Gold-plated elastic brush contacts
- Movable stop and protective cap
- Optional metal ring: axial strength from 20 to over 40 kg
- Shaft extension up to 100 mm from the panel
- Optional sealed version

ROTARY SWITCHES

DESIGNED AND MADE IN ITALY

11R · Dimensional drawing

DIMENSIONS IN MM

FRONT VIEW

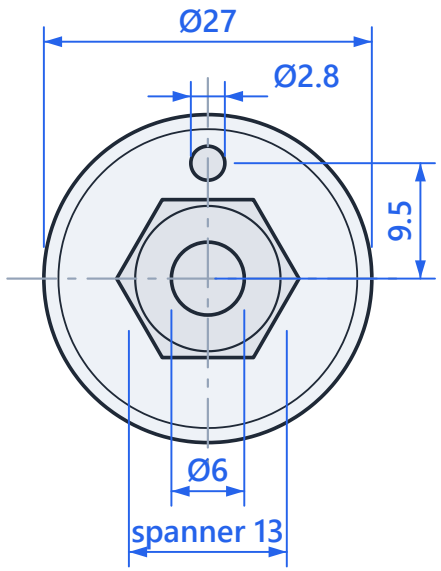

SIDE VIEW

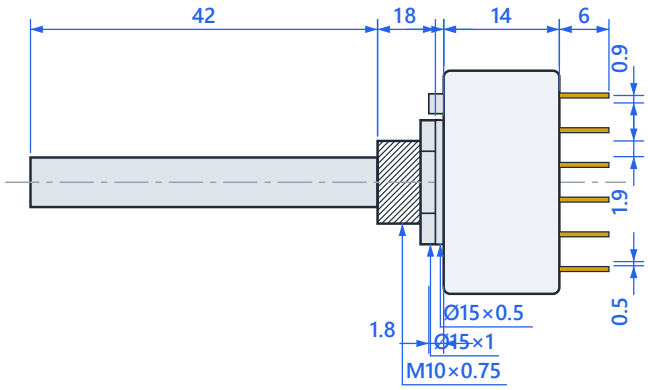

1 WAY · 1 POLE

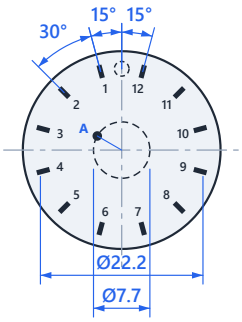

2 WAYS · 2 POLES

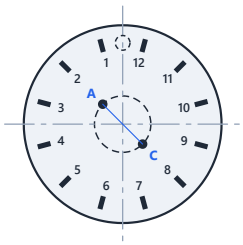

3 WAYS · 3 POLES

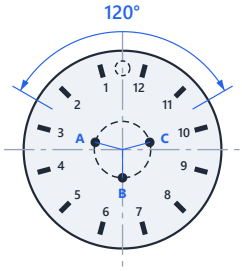

4 WAYS · 4 POLES

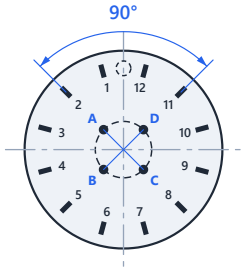

Metal parts · Body / decks · Terminals · Drawings not to scale · general tolerances as per manufacturer