BASIC SERIES

10R

SIGNAL SWITCH FOR PCB MOUNTING

1 to 4 poles with 30° detent: glass-filled nylon housing and fully inspectable construction.

Up to 12 positions | Up to 4 poles | For PCB mounting | Made in Italy



POSITIONS	DETENT ANGLE	CONTACT RESISTANCE	DIAMETER
up to 12	30°	< 10 mΩ	27 mm

ELECTRICAL AND MECHANICAL DATA

Rating (resistive load)	200 mA @ 250 Vac · 400 mA @ 30 Vdc
Initial contact resistance	< 10 mΩ
Insulation adjacent contacts	1200 Vac · 20×10^9 Ω
Insulation between poles	1300 Vac · 22×10^9 Ω
Operating temperature	–20 … +80 °C
Mechanical life	> 120,000 operations (with load = 10% of rated value)
Detent torque	1.0–1.2 kg·cm · soft 0.6–0.8 kg·cm

CONFIGURATIONS

MODEL	POLES	POSITIONS
10R112	1	12
10R206	2	6
10R304	3	4
10R403	4	3

Non-shorting; shorting with suffix S (e.g. 10R112S).

FEATURES AND VERSIONS

- Gold-plated elastic brush contacts
- Movable stop and protective cap
- Optional metal ring: axial strength from 20 to over 40 kg
- Shaft extension up to 100 mm from the panel
- Alternative pole outputs (B and D instead of A and C) for 2 poles
- Sealed version: shaft O-ring, internal seal in the threaded bushing, nitrile rubber washer for panel mounting

ROTARY SWITCHES

DESIGNED AND MADE IN ITALY

10R · Dimensional drawing

DIMENSIONS IN MM

FRONT VIEW

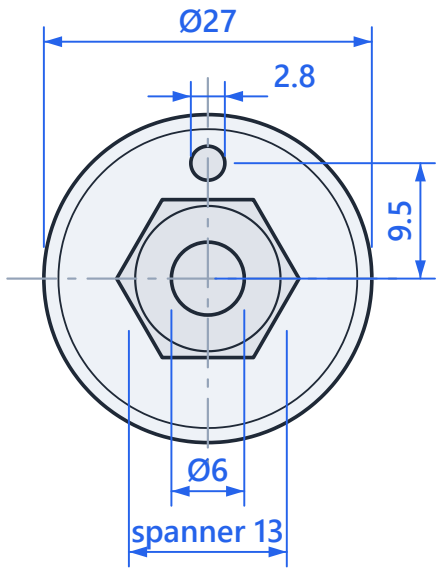

SIDE VIEW

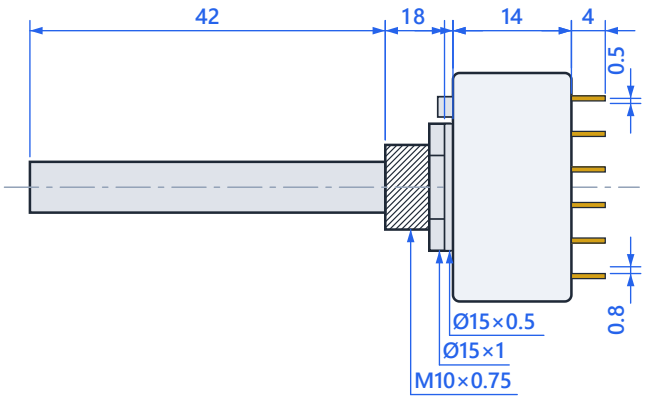

1 WAY · 1 POLE

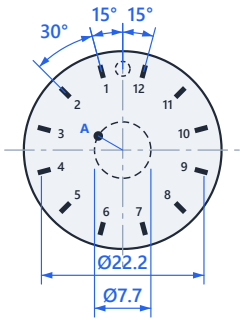

2 WAYS · 2 POLES

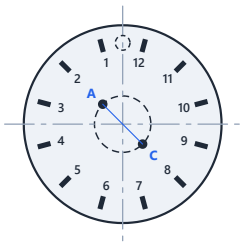

3 WAYS · 3 POLES

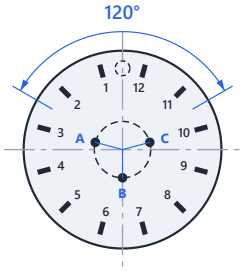

4 WAYS · 4 POLES

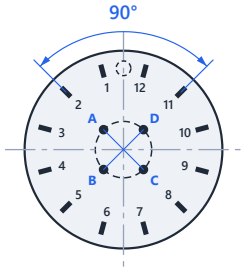

Metal parts · Body / decks · Terminals · Drawings not to scale · general tolerances as per manufacturer